Intellitrol®2

Overfill Prevention, Ground Verification & Vehicle Identification for Petroleum & Chemical Gantries

Featuring Dynacheck® – Automatic and Continuous Self-Checking Circuitry

Intellitrol®2
Overfill Prevention Control Unit

The Intellitrol®2 is intended to serve as a secondary overfill protection system for loading operations. It is intended for use in hazardous locations and is packaged in an explosion-proof (flameproof) enclosure and has both International and US approvals and certifications.

The Intellitrol®2 performs a variety of monitoring functions and provides a number of outputs to control valves, pumps and other systems including Terminal Automation Systems (TAS). It has an integrated display to indicate system and monitoring status, a bypass capability, and communications for integration with TAS and other systems.

The Intellitrol®2 contains a pair of microprocessors, each with its own relay, that monitors critical functions. Only when both processors detect a safe condition will both relays close and make outputs permissive.

The Intellitrol®2 is designed to be Faylsafe® and in the event of a failure (power, sensors, or internal electronics) the unit will enter a non-permissive (safe) state.

This state-of-the-art Dynamic Self-Testing® system controller provides overfill prevention, vehicle ground verification and vehicle identification operating in a single enclosure. The Intellitrol®2 also provides the user with comprehensive diagnostic information, both locally on the exterior of the control unit housing and remotely to the terminal automation system via RS-485 communications.

SIL 2

IEC 61508 Certified
SIL 2

FEATURES & BENEFITS

- Overfill prevention, ground verification and vehicle identification in one compact state of the art explosion-proof enclosure.
- Scully Dynacheck® automatic and continuous self-checking circuitry.
- Automatic detection of two-wire optic/thermistor or five-wire optic vehicle sensors.
- Monitoring of up to 8 two-wire or 15 five-wire vehicle sensors.
- Complete visual diagnostic display of overfill sensors' status. Will not permit loading under any fault or wet sensor condition.
- When used with Scully Sensors, the Scully Intellitrol®2 Control Unit has been certified as part of a SIL 2 Overfill Prevention System.
- Easy connection to vehicles with rugged high impact industry standard plug and cable units.

scully
Scully Signal Company 800-272-8559 • sales@scully.com • www.scully.com

TECHNICAL SPECIFICATIONS

Temperature Range:
- **Operating:** ICC Models: -40° to +60°C (-40° to +140°F)
- **Storage:** -45° to +85°C (-50° to +185°F)

Power Requirements:
100 - 130 VAC (120 VAC Setting) or 200 - 250 VAC (240 VAC Setting)
50/60 Hz, 30 watts maximum

Enclosure: Explosion-proof weathertight housing with powder coated corrosion resistant finish. Weathertight rating: Type 4X and IP 65.

Sensor Inputs: Up to 8 Scully two-wire optic/thermistor sensors (6 or 8 channels) or 15 five-wire optic sensors (maximum). Automatic detection of two-wire vs. five-wire sensors. 3-wire high-temperature thermistor sensors is not supported.

Ground Verification Inputs:
When configured for Ground Bolt detection, a Scully Ground Bolt connected to pin number 9 of the overfill prevention system socket(s) and installed onto the vehicle frame per Scully installation instructions (No.61081) is needed to satisfy this input. When configured for Resistive Ground detection, all vehicles must be wired with socket pin number 9 and 10 connected to separate points on the vehicle chassis.

Dead Man Input: An intrinsically safe input is provided for an optional dead man switch.

Outputs: Two independent outputs are provided as follows:

- **Main Permissive Output:**
A Form-A ("normally open") AC relay output with "monitored redundant contacts". This output closes when all overfill prevention sensors are dry and functional, a proper ground connection, and/or vehicle I.D. (optional), and/or deadman (optional) is established. This output is an AC control output and must only be used with AC voltage. This output should be used for product flow shutdown capability and is rated at 250 VAC, 5 amps resistive.

- **Main Form-C, Volt-Free Output Relay:**
A Form-C ("normally open" and "normally closed") volt-free redundant relay output contact.These output contacts reverse state ("normally open" closes and "normally closed" opens) when all overfill prevention sensors are dry and func tional, and a proper ground connection, and/or deadman (optional), and/or vehicle I.D. is established. If a volt-free relay output contact is needed, the "nor mally open" relay output contact may be used for product flow shut down. The "normally closed" relay output contact is intended for any additional non-critical output status reporting functions. This Form-C contact is rated at 250 VAC, 5 amps resistive.

Response Time: 450 milliseconds maximum after wet sensor or fault condition.

Communications Port:
The communications port is a half-duplex, RS-485 multi-drop communications port, utilizing Modbus™ RTU (straight binary) communications protocol at 1200, 2400, 4800, 9600 or 19200 baud rate; 8 bits; even, odd or no parity.

Approvals: All Intellitrol2 units fall under the approvals for:
- FM Approved for use in Canada and the United States Rated: Class I, Division 1, Groups C and D, T4, 4X; with Intrinsically Safe outputs for connection to Class I, Division 1, Group C and D, and Class I, Ta = -40°C to +60°C
- NEMA 4X rating, for either indoor or outdoor use and is Watertight, dust tight and corrosion resistant.
- ATEX: - Ex d ia IIB T4 IP65 (Tamb = -40oC to +50oC) Gb
- IECEx Certification: GBBASExTR11.030500

Intellitrol2 Control Module & Display Board
Intellitrol2 ICC Control Module
Intellitrol2 ICC-SIL Control Module

FM C US APPROVED

Ex II2G

CE 1180

Dimensions: Refer to diagram

Shipping Weight: 14.1 kg. (31 lbs.)

scully

MODEL DESIGNATIONS

Model Designations		*Prefixes*		*Suffixes*		
FM & CSA Approved	=	IC2	}–	O Overfill Prevention	G Ground Verification	V Vehicle Identification
ATEX Approved	=	ICC2	}–	O Overfill Prevention	G Ground Verification	V Vehicle Identification

Dimensions shown in inches & millimeters

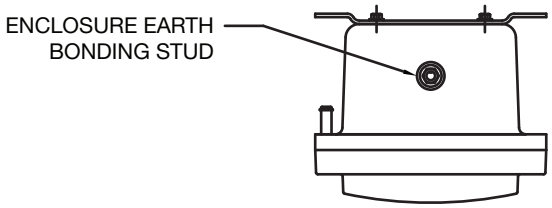

Top View

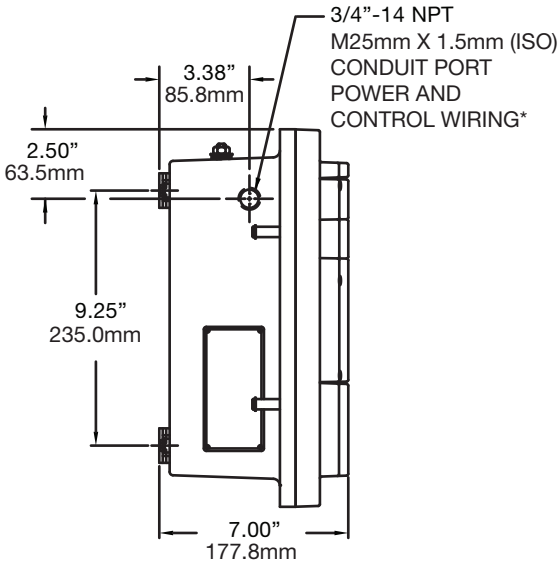

Side View Left

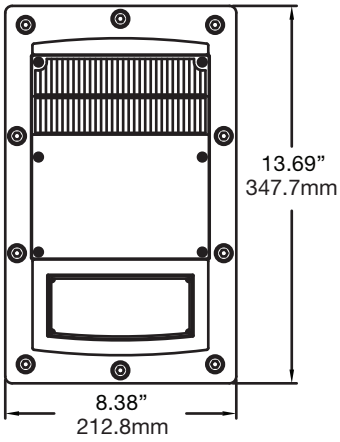

Front View

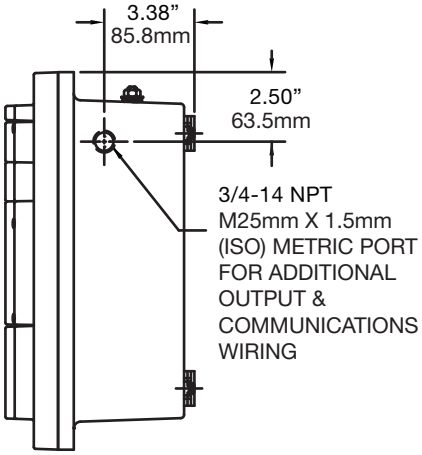

Side View Right

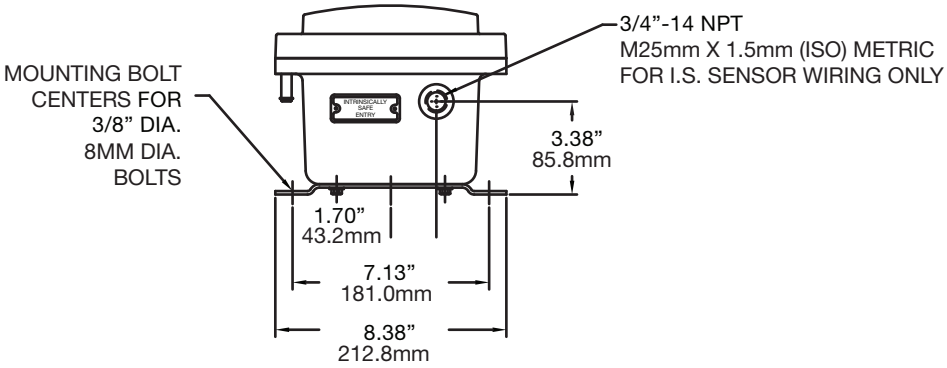

Bottom View

Intellitrol®2

Overfill Prevention, Ground Verification & Vehicle Identification for Petroleum & Chemical Gantries

CONTROL UNITS

Description	Part Number
IC2-OG Intellitrol Overfill & Ground (Earth) **(FM / CSA Approvals)**	**09549**
IC2-OGV Intellitrol Overfill, Ground (Earth) & V.I.P. **(FM / CSA Approvals)**	**09550**
ICC2-OG Intellitrol, Overfill & Ground (Earth) **(ATEX Approvals)**	**09547**
ICC2-OGV Intellitrol, Overfill, Ground (Earth) & V.I.P. **(ATEX Approvals)**	**09548**

SYSTEM ACCESSORIES

Description	Part Number
Bypass Key Authorizer	**08939**
Deadman Control Switch Assembly	**08863**
Intelliview® 2 Terminal Software	**08951**
USB to RS-485 Converter Kit (for communications)	**09001**
SC-8OB Sculcon Junction Box with 8B Style Black Poly Plug and 6 meter (20 ft) Blue Straight Cable (for 2-wire or 5-wire sensors - 4-bayonet pins - 10 contact pins)	**08958**
SC-8B Sculcon Junction Box with 8B Style Green Poly Plug and 6 meter (20 ft) Blue Straight Cable (for 2-wire or 5-wire sensors - 4 bayonet pins - 10 contact pins)	**08959**
SC-8A Sculcon Junction Box with 8A Style Green Poly Plug and 9 meter (30 ft) Orange Coiled Cable (for 2-wire sensors - 2 bayonet pins - 10 contact pins)	**08729**
SC-6A Sculcon Junction Box with 6A Style Green Poly Plug and 9 meter (30 ft) Orange Coiled Cable (for 2-wire sensors - 2 bayonet pins - 8 contact pins)	**08156**
SC-6W Sculcon Junction Box with 6W Style Blue Poly Plug and 9 meter (30 ft) Blue Coiled Cable (for 5-wire sensors - 3 bayonet pins - 6 contact pins)	**08159**

REPLACEMENT PARTS

Description	Part Number
Module Assembly, 2-OG 240V	**09551**
Module Assembly, 2-OGV 120V	**09552**
Module Assembly, 2-OGV 240V	**09577**
Module Assembly, 2-OG 120V	**09576**
Cover Bolt, M8 x 1.25 x 25mm	**50005**
Contact Fuse (F5, F8), 5A, Hi-interrupt	**26372**
Cover O-ring (gasket)	**31340**
Corrosion Inhibitor	**40268**
Lens Assembly (with 6 mounting screws)	**09181 (ATEX) 08980 (FM)**
Display Module (with backing plate)	**09553**
Display Cable Feed-through	**08982**
Lens Mounting Screw, 8-32 x 3/4	**50080**
Retaining Ring, Cover Hinge	**54039**
Text Mask (English), Overfill and Ground	**38052***
Text Mask (English), Overfill, Ground and Vehicle ID	**38053***
Heat Sink Assembly	**09481**

***For a diagnostic display panel in a language other than English add - "S" for Spanish, "F" for French, "I" for Italian, "D" for Danish or "G" for German**

Copyright © 2016 Scully Signal Company. Dynacheck, Dynamic Self-Checking, Dynamic Self-Testing, Faylsafe, IntelliCheck, Intellitrol are registered trademarks of Scully Signal Company. All Rights Reserved. Specifications are subject to change without notice.

60723_Rev A_Intellitrol®2_March 2016

Scully Signal Company 800-272-8559 • sales@scully.com • www.scully.com