Scully ST-15

Technical Manual

Single Point Overfill Prevention Control Monitor

Scully Signal Company 70 Industrial Way, Wilmington, MA 01887, USA • 800-272-8559 • sales@scully.com • www.scully.com

Table of Contents

General 4.

1.1 The ST-15-115H & ST-15-240H Module

1.2 Technical Specifications

Scully Liquid Level Sensors 6.

2.1 Thermistor Sensors

2.2 Uniprobes

2.3 High Temperature Sensors

2.4 Scully Instant-On™ Two Wire Optic Sensors

ST-15 Series Control Units 7.

3.1 Housings

3.2 Model Numbering System

ST-15 Module 8.

4.1 Description

4.2 Power Requirements

4.3 Control Circuit Ratings

4.4 Dynacheck Monitor Lamp

4.5 Mechanical Installation Of the ST-15 Module

4.6 Electrical Connections

4.6.1 Sensor Connections

4.7 Operation

4.8 Maintenance

4.8.1 Thermistor Calibration

ST-15 Systems Using The ST-15 Module 12.

5.1 ST-15 "L" and "K" Options

5.1.1 Output Control

5.1.2 Indicator Lamp Functions (“L” option)

5.1.3 Control Switch Functions (“K” option)

Table of Contents

Tank Vehicle Overfill Protection 13.

6.1	Thermistor Sensors	
6.2	Uniprobes	
6.2.1	Tank Vehicle Mounted Sensors	
6.2.2	Temporarily Installed Sensors	
6.2.3	Top Loading - Vapor Recovery Applications	
6.2.4	Loading Arm Mounted Sensors	
6.3	Tank Vehicle Sensor And Socket Installation	
6.3.1	Sensor Types and Their Typical Uses	
6.3.2	Tanker Socket Types	
6.3.3	Vehicle Wiring	
6.4	Loading Rack Equipment Installation	
6.4.1	SC-6A Plug and Cable Assemblies	
6.4.2	SC-1 Series Plug and Cable Assemblies	
6.4.3	SJ- 4R and SJ-4D Sockets	

Diagram Appendix

7.1	DWG 61420 Thermistor and Uniprobe Resistance Measurements	16.
7.2	DWG 20269 Outline Drawing ST-15 Module	17.
7.3	DWG 61421 Internal Wiring Diagram ST-15-120/240 EL	18.
7.4	DWG 61422 Internal Wiring Diagram ST-15-115/240 ELK	19.
7.5	ST-15 Outline Drawing	20.
7.6	DWG 61423 Field Wiring Diagram ST-15 Direct Sensor Wiring	21.
7.7	DWG 61424 Field Wiring Diagram ST-15 with SC-6A	22.
7.8	DWG 61425 Field Wiring Diagram ST-15 with SC-1	23.
7.9	WG 61201 Replacement Parts Diagram, ST-15 115VAC	24.
7.10	DWG 61561 Replacement Parts Diagram, ST-15 240VAC	25.

Functional Safety Proof-Test Checklist 26.

General

The Scully ST-15 is an optic or thermistor secondary overfill prevention control unit that connects to vehicles equipped with the Scully model SP-TO two-wire optic sensor or SP-BL (Thermistor sensor), BLU (Uniprobe) and BLH series thermistor sensors. The ST-15 outputs Dynacheck® signals for automatic and continuous monitoring of system status. In the unlikely event of a fault, Scully's Faylsafe™ system will not permit loading.

The ST-15 controller is available in an explosion proof and weatherproof housing which is denoted by an "E" in the model description.

Available configurations in 115V and corresponding 240V models covered by this manual are listed below:

In Explosion Proof Housings	
ST-15-115-EL	ST-15-240-EL
ST-15-115-ELK	ST-15-240-ELK

1.1 The ST-15-115H & ST-15-240H Module

Model ST-15 is the basic single channel modular monitor circuit for use with Scully Thermistor and Two-Wire Optic Liquid Level Sensors. This unit is powered by line voltage and provides DPDT relay contacts for auxiliary load control.

The ST-15-115H is the building block on which all Scully ST-15-115 Series Control Units are based. The ST-15-240H is the building block on which all Scully ST-15-240 Series Control Units are based.

The ST-15C-115H is designed to be powered by a 105 - 125VAC 50-60 Hz supply.

Models for operation from 210 - 250VAC 50-60 Hz main power supplies are designated ST-15-240H.

The designations "115" or "240" indicating main power supply voltage are carried throughout the product line model numbering system. ST-15 will be used as the default reference throughout this manual.

NOTE: The Latest Module has both FM & ATEX approvals and is labeled ST-15C-115 or ST-15C-240. Diagrams in this manual may not indicate a "C" moniker, but still applies. Also, the "H" moniker is left in this manual to indicate the module not system.

1.2 Technical Specifications

Temperature Range	-40°C to +60°C
Power Requirements	120VAC Models: 105 – 125 VAC, 50/60 Hz, 20VA Max.* 240VAC Models: 210 – 250 VAC, 50/60 Hz, 20VA Max.* *20VA does not include circuits controlled by the output relay contact
Sensors:	One of the following sensors: SP-BLUK Series Thermistor Sensor (-40˚C to +48˚C) SP-BLHK Series Thermistor Sensor (-28˚C to +93˚C) SP-TO, SP-IO OR SP-IR Series 2-Wire Optic Sensor (-40˚C to +60˚C)
Output Relay:	One normally open volt-free contact rated 250VAC, 5A resistive max. The output contact closes when all sensors are dry and functional.
Response Time:	0.5 second maximum
Indicator Lights:	Output status indicator lights: Red: Non-permissive Green: Permissive
Output Control Fuse:	Internal 5 Ampere
Connections:	Provided by internal terminal strips.
Enclosure:	Explosion-proof, weatherproof IP65.
Dimensions:	See Appendix 7.5 for outline drawing.
Weight:	12.7 Kg (28 Lbs.)
Approvals:	FM Explosion Proof for Class 1, Division 1, Group C & D, T6 (-40°C ≤ Ta ≤ +60°C)

Degree of protection of enclosure IP65. The rating of the enclosure is negated if the holes in the enclosure are unplugged/unscrewed or any holes are drilled into the enclosure. Cover screws to minimum grade A2-70 stainless steel.

The ST-15 control unit has been designed to be impact-resistant. Do not subject to excessive mechanical or thermal stresses. Do not allow the unit to come in contact with aggressive substances.

The ST-15 may only be repaired by replacing the internal control module. The internal control module is non-repairable.

Do not open when an explosive gas atmosphere is present.

2.1 Thermistor Sensors

Scully Liquid Level Thermistor sensors are a two-lead device which connects via a pair of wires to the input terminals of the ST-15. Thermistor sensors are available in a wide range of constructions to suit different applications and environments. Descriptions and specifications are available in Scully Technical Data Catalog Sheets.

The general application areas for thermistor sensors are liquid level sensing of petroleum products ranging from gasoline through No. 4 oil at temperatures of -20° F to +130° F (-28° C to +55° C). They may also be used to sense a variety of other liquid products compatible with the construction materials and approval listings of these sensors.

Due to variations in manufacturing processes, thermistor sensors from an individual manufacturing runs may be overly sensitive to airflow. This applies to all thermistor sensors as listed in sections 2.2 and 2.3 as well. If the ST-15 module with a thermistor sensor seems sensitive to air flow, refer to section 4.8.1 of this manual or contact Scully Service.

2.2 Uniprobes

Model SP-BLU Uniprobes are Scully thermistor sensors with extended low temperature performance thermistors permitting their application in temperature environments of -40° F to +120° F (-40° C to +48° C). Uniprobes are otherwise identical to corresponding models of thermistor sensors. A suffixed “U” in a Scully thermistor sensor model number denotes the Uniprobe thermistor.

2.3 High Temperature Sensors

Model SP-BLH Sensors are Scully Uniprobes with extended high temperature performance thermistors permitting their application for heated products up to +200° F (-18° C to +93° C). The high temperature sensor differs from all other thermistor Sensors in that it uses three wires. A suffixed “H” in a Scully thermistor sensor model number denotes the high temperature thermistor.

2.4 Scully Instant-On™ Two Wire Optic Sensors

Model’s SP-IO, SP-TO, and SP-IR Instant-On Sensors are two lead devices using an infrared optic principle to detect liquids. Descriptions and specifications are available in Scully Technical Data Catalog Sheets.

The general application areas for two-wire Sensors are liquid level sensing of petroleum products ranging from gasoline through No. 4 oil at temperatures of -40° F to +140° F (-40° C to +60° C). They may also be used to sense a variety of other liquid products compatible with the construction materials and approval listings of these sensors.

3.1 Housings

ST-15 modules are available in NEMA-7 explosion-proof housings.

3.2 Model Numbering System

All ST-15 modules in the ST-15 series have model numbers beginning with ST-15-115 or ST-15-240, according to the main power supply. The suffixed letters and numbers describe the optional controls and indicators. The letters and numbers used and their interpretations follow:

Model Configurations and Suffix Definitions

“E” Indicates the ST-15 module has an explosion-proof housing.

“L” Indicates the ST-15 module is fitted with indicator lamps.

“K” Indicates that the ST-15 unit is fitted with a lockable “Bypass Switch” permitting key controller over-ride of automatic overfill shutdown systems.

ST-15 Module

4.1 Description

The model ST-15 is a ST-15 control module for use with Scully Dynaprobe Thermistor, Uniprobe and Instant-On Optic Liquid Level Sensors. The module uses the Scully Dynacheck®` system for dynamically self-checking the sensor, lead wires and all control circuit components up to 30 times per second. The circuit will fail safe (indicating high level) under all expected component or power failures.

The sensor circuitry is intrinsically safe and has been designed so that the control unit can not deliver sufficient energy to the sensor circuit to ignite Class I, Group D, Division 1 hazardous materials. The ST-15 module itself is not rated for use in hazardous locations without being enclosed in an explosion-proof housing.

4.2 Power Requirements

The ST-15-115H is designed to operate from 105 -125VAC 50-60 Hz and the ST-15-240H from 210 - 250VAC 50-60 Hz. Current draw is less than 1/4 ampere for the 115 volt models and less than 1/8 ampere for the 240 volt models.

4.3 Control Circuit Ratings

The ST-15 has a DPDT output relay for controlling external alarms and other loads. Contact ratings are 5 amperes resistive at 240 VAC. Power relays or motor starters must be used if the controlled load exceeds this rating.

4.4 Dynacheck Monitor Lamp

This flashing lamp, located on the ST-15 module, provides a visual indication of the Dynamic Self-Checking, taking place when the ST-15 unit is connected to a “dry” sensor.

The lamp should flash every few seconds and will stop flashing when the sensor is “wet” or if a malfunction in the sensor wiring or ST-15 module circuit exists. Burnout of this indicator lamp bulb will not impair the operation of the ST-15 module or the Dynamic-Self-Checking function.

Use only a 12ESB lamp (Scully Part No. 27002) for replacement purposes. The lamp pulls straight out of its socket. Do not replace this lamp unless main power has been removed from the ST-15.

4.5 Mechanical Installation Of the ST-15 Module

The ST-15 module is designed for mounting inside an enclosure suitable for protection against damage and environmental conditions to which it will be exposed. Hole locations are shown on Diagram 20269, Section 7.2.

4.6 Electrical Connections

When making electrical connections to the ST-15 module, keep the intrinsically safe wiring to the Sensors separate from the 115V power and control wiring. Separate entrance holes and conduits must be used for the sensor circuits and other wiring.

CAUTION: THE IMPORTANCE OF MAINTAINING ABSOLUTE SEPARATION OF INTRINSICALLY SAFE AND UNSAFE WIRING CAN NOT BE OVEREMPHASIZED!

Connect line power to terminals 2 and 3 of the power terminal strip on the module. This source may be switched externally if desired, but consideration should be given to someone inadvertently switching off power to the ST-15 module causing an alarm or shutdown to take place. Terminal 1 on this strip should be wired to ground or a grounded point on the enclosure, assuming ground is provided through conduit.

Connect the controlled circuits to the appropriate relay contacts on the power terminal strip. The diagram on the module shows the position of the contacts with the control relay released. This corresponds to the ST-15 module powered up with a “wet” sensor connected. When the sensor is “dry” the control relay will be energized. A failure anywhere in the sensor wiring or the sensor will result in the control relay being released.

4.6.1 Sensor Connections

4.6.1.1 Standard Dynaprobe Thermistor, Uniprobe, and Two-wire Optic Sensors

Connect the two leads from the Thermistor sensor to terminal strip TB2 pins 4 and 3, black to pin 4 and white to pin 3. Leave factory installed jumper connected to TB2, terminals 1 and 2. When using Uniprobes, be sure the BLACK lead connects to TB2-4 terminal and the WHITE lead connects to TB2-3 terminal.

4.6.1.2 “H” (High Product Temperature) Thermistors

Remove the factory installed jumper connected to TB2 terminals 1 and 2. Connect the GREEN, WHITE, and BLACK Thermistor sensor leads to TB2 terminals 2, 3, and 4 respectively. Be very careful to preserve the continuity of the three leads.

4.6.1.3 Sensor Lead Extension

The sensor leads may be extended with normal electrical wire. The resistance of each extension conductor should be kept below 2Ω. Do not use a test lamp or other high current device to check the sensor circuit. If a low current ohmmeter is available, the sensor circuit may be checked and should display the resistance given below shown in DWG 61420 (see section 7.1). When measuring Uniprobes, the positive lead of the ohmmeter must connect to the BLACK lead of the sensor.

Wire Size (mm2)	Wire Size (AWG)	Maximum Run Length (Feet)	Maximum Run Length (Meters)
1.5	#16	400	120
2.5	#14	700	210
4.0	#12	1000	300
6.0	#10	1600	480
10.0	#8	2500	760

CAUTION: If extending Sensor leads beyond 2,500 feet (760 m), please consult the factory for specific wiring recommendations to prevent jeopardizing the intrinsically safe nature of the system.

The sensor lead wires should be run in conduit or other protection and should never be intermingled with line voltage wiring. It is not necessary to use shielded cable to extend the sensor leads.

Do not use a test lamp or other high current device to check the sensor circuit. If a low current ohmmeter is available, the sensor circuit may be checked and should display the resistance shown in DWG 61420 (see section 7.1). When measuring Uniprobes, the positive lead of the ohmmeter must connect to the BLACK lead of the sensor.

4.7 Operation

4.7.1 Warm-Up Time

A short time delay will occur between the application of power to the ST-15 module unit and control relay pull in with a “dry” sensor. This delay is characteristic of the thermal warm-up of a cold sensor and will take approximately 30 seconds. A similar delay will also occur when sensing the change from “wet” to “dry” condition. There is no delay in responding to a change from “dry” to “wet” sensor condition (high level sensing).

The warm-up time should be taken into consideration when designing alarm installations. Otherwise, the alarm may sound for approximately 30 seconds at initial turn-on of the alarm system. This feature may be desirable in some applications to provide a full system check if the alarm system is infrequently used.

NOTE: Model SP-IO and SP-TO Instant-On Sensors require no warm-up time.

4.7.2 Functional Testing

The ST-15 should be tested per Table 1 as part of the installation and commissioning process before being approved for service, and any time the function of the system may come into question. It is important to note that the ST-15 meets the requirements for IEC 61508 SIL 3 (Certificate # SSC 080841 C001). Systems installed as part of a Safety Instrumented System must undergo periodic proof tests, of which the Functional Test is a required process. Please refer to The Scully ST-15 Safety Manual PN 61626 if the process controls require Functional Safety compliance.

4.8 Maintenance

The model ST-15-115H control unit is designed for continuous operation. The only component which may require field replacement is the Dynacheck indicator lamp.

All other components are mounted onto the printed circuit board and are not field replaceable. The equipment should be serviced by field replacement of the ST-15 module and the defective unit returned for shop service.

Please remember that improper field wiring, component substitutions or “jumping” connections while testing can defeat the intrinsically safe design of this equipment and result in the application of dangerously high voltages to the sensor lead wires.

4.8.1 Thermistor Calibration

The ST-15 module control circuit has a trip point adjustment which is preset at manufacture to work properly with all IEC EN 13922 two-wire optic and thermistor sensors. Due to variations in manufacturing processes, thermistor sensors from individual manufacturing runs may be overly sensitive to airflow. If the ST-15 module with a thermistor sensor seems sensitive to air flow, the adjustment may be reset in the field as follows:

Test Equipment Required

1 - Digital or Analog Multimeter with frequency measurement capability.
1 - Screwdriver (Approx. 1/8-inch head).
1 - Set of test leads with alligator clips at the other end.

4.8.1.1 Adjustment Procedure

NOTE – This procedure matches a specific ST-15 module with a specific thermistor sensor as a set. If the ST-15 module or thermistor sensor is replaced, it will be necessary to recalibrate the module to the thermistor.

DO NOT PERFORM THIS PROCEDURE WHEN USING AN OPTIC SENSOR.

1. Turn off the power to the ST-15 module to be calibrated.
2. Remove the module metal circuit cover by removing the screw in the center of the cover. Locate the adjustment potentiometer R10 on the circuit card. (See Figure 1)

Figure 1

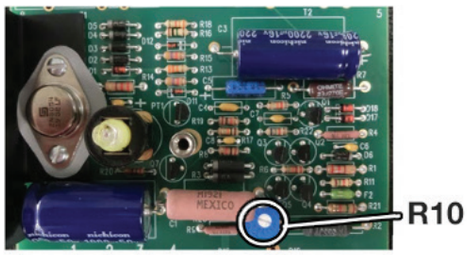

3. Connect the thermistor sensor to be used. If the factory installed jumper is not already in place across TB2 terminals 1 and 2, one should be installed. For older models, the factory installed 680 ohm resistor should be in place across the 'W' and 'G' terminals.
4. Ensure the thermistor is in an environment with no air flow. If the ambient temperature is below 0°C or it is not possible to eliminate airflow, it is acceptable to cover the tip of the thermistor with a bag or piece of cloth to isolate the sensor.
5. Set the Multi-Meter to measure frequency. Connect the + test lead from the multimeter to TB2-4. Connect the – lead from the multimeter to TB2-3. For older models, connect the + lead to the 'B' terminal and the – lead to the 'W' terminal.
6. Power the system up. Allow the ST-15 to reach a permit condition. This may take as long as 2 minutes.

CAUTION – LIVE AC MAINS VOLTAGE WILL BE PRESENT ON TB1.

7. Slowly adjust R10 clockwise until the frequency measurement stops increasing. Do not turn R10 past this point.
8. Turn R10 slowly counterclockwise until the frequency begins to decrease, then slowly turn back clockwise until the frequency stops increasing.

NOTE: Due to manufacturing variations of the thermistor, the final frequency will vary somewhat from unit to unit. The ST-15 and Scully Thermistors are designed to IEC EN 13922 standards, which require the operating frequency to be between 20 Hz and 125 Hz. If the final frequency is beyond these limits, contact Scully Service.

9. The ST-15 should be in a permit state at this time. If not, repeat steps 7 and 8. If the unit is still not permitting, contact Scully service.
10. Disconnect Mains power. Remove the multi-meter test leads from TB2, and reattach the module metal circuit cover. Close the ST-15 enclosure, then reapply mains power. The unit is now ready for service.

ST-15 Systems Using The ST-15 Module

Features, connections, and operation of specific ST-15 control systems which are built around the ST-15 module are described in this section.

5.1 ST-15 "L" and "K" Options

The ST-15-115 and 240-ELK monitor contains a set of red and green indicator lamps and a lockable power control and bypass switch. They are often used in conjunction with rail car loading or single compartment tank truck loading systems to provide overfill protection via automatic high level shutoff or loading valves or pumps.

5.1.1 Output Control

Output control provision on these models is provided by SPDT contact set in the ST-15modules output control relay. These contacts are rated for 5A - 240 VAC resistive loads. Power relays or motor starters should be used to buffer these relay contacts if high power loads must be controlled. See appropriate field wiring diagrams for the location of these terminals.

5.1.2 Indicator Lamp Functions (“L” option)

The GREEN lamp lit indicates a normally functioning unit, connected to a dry sensor.

The RED lamp lit indicates a wet sensor, or a system fault which has caused a fail safe “wet” condition.

5.1.3 Control Switch Functions (“K” option)

Switch Position	Function
OFF	Switch in far left position. Removes mains power from the ST-15 module and the indicator lamps. The output control contacts will be in their “wet” state.
ON	Switch in center position. Powers the ST-15-115H module and the indicator lamp circuits for normal operation.
BYPASS	Switch in far right position. Removes power from the ST-15 module and indicator lamp circuits and creates a switch closure across the “dry” contact position of the systems output circuit. This removes all automatic control by the ST-15 MODULE system. **USE THE BYPASS SWITCH WITH CARE!**

Caution: Placing the switch on BYPASS removes all fail-safe operation and secondary overfill prevention.

Tank Vehicle Overfill Protection

A common application for single channel ST-15 monitors is providing of primary or secondary overfill protection during the loading of single compartment tank vehicles or railcars.

Secondary overfill protection implies that the filling operation is expected to be stopped automatically by a product flow meter pre-set to deliver a specific amount of product before stopping the flow. The ST-15 module overfill detection system acts as a backup system to stop product flow in instances where the flow meter is pre-set incorrectly or suffers an unsafe failure.

6.1 Applicable ST-15 Module Monitors

Any single channel ST-15 monitor in the ST-15 series may be used for these applications, but the most commonly used model is the ST-15-115 or 240 -ELK. This model includes an explosion-proof housing for mounting in hazardous locations.

6.2 Sensor Location

Single channel tank vehicle overfill control systems can use a Scully sensor in the following applications:

6.2.1 Tank Vehicle Mounted Sensors

In this application, a sensor is permanently mounted in the tank vehicle with the sensing level set at the desired overfill sensing level.

6.2.1.1 Two-Wire Sensor to ST-15 Connection

The sensor in the tank vehicle is connected to the ST-15 monitor at the loading point via a plug and socket connection. Scully manufactures tank vehicle sockets and loading point plugs and cables for these applications. The sensor is connected to the ST-15 via a vehicle socket to loading plug interface (Sculcon).

6.2.2 Temporarily Installed Sensors

In applications where the sensor cannot be permanently installed in the tank vehicles, Scully manufacturers sensors suitable for temporary installation during loading and removal when loading is completed.

Typical applications for these types of sensors are rail car and chemical tanker loading, where for various reasons the sensors cannot be permanently installed in the vehicles. In these applications the sensors are installed in a “cane” or portable style holder which is placed in the loading hatch prior to loading. These units are vertically adjustable to permit setting the overfill detection level to suit the vehicle being loaded. This style of sensor installation is generally connected by a flexible cord to the loading rack equipment, permitting a range of movement to suit the application.

6.2.3 Top Loading - Vapor Recovery Applications

A Scully sensor may be mounted inside the vapor collection passages of top loading vapor recovery heads providing automatic overfill protection. The electrical leads from the sensor are run along the loading arm to a connection in the ST-15 monitor.

Some vapor recovery heads are fitted with electrical switches which operate when the head is secured to the vehicle. This type of switch may be wired in series with the Black colored sensor lead to prevent loading when the vapor recovery head is not secured.

6.2.4 Loading Arm Mounted Sensors

In some applications a sensor may be mounted on the outside of a conventional loading arm where the normal use of the arm will locate the sensor at an overfill cut off level inside the vehicle. These applications require that the loading arm insertion into the tank vehicle be predictably constant to insure that the overfill detection level is properly established.

6.3 Tank Vehicle Sensor And Socket Installation

6.3.1 Sensor Types and Their Typical Uses

For unheated light products use Thermistor sensor Dynaprobe Model SP-BL, Uniprobe Model SP-BLU, and Instant-On Optic Models: SP-TO, SP-IO, mounted in an appropriate Scully sensor holder. Model SP-IR is a one piece unit that includes a sensor holder.

For heated products, use Thermistor sensor Model SP-BLH in an appropriate Scully sensor holder.

For corrosive products use stainless steel Thermistor sensor Dynaprobe Model SP-BL(SS), Uniprobe Model SP-BLU(SS), and Optic Model SP-TO(SS) in an appropriate Scully sensor holder.

6.3.2 Tanker Socket Types

Two models of Scully sockets are commonly used for single compartment overfill detection/sensor connection. These are:

SJ-6S	A Scully pattern socket featuring rugged construction with bayonet action connection. This socket mates with a Scully SC-6A Plug and Cable Assembly.
SJ-4D	A four (4) pole “trailer” style socket. This socket mates with any of the Scully Plug and Cable systems shown on Drawing 61425 Tanker and Loading Rack Wiring, located in the Appendix.

6.3.3 Vehicle Wiring

6.3.3.1 Regular Thermistor Sensors

Wire according to Drawing 61424 (SJ-6S socket) or Drawing 61423 (SJ-4R and SJ-4D sockets). Drawings located in Appendix.

6.3.3.2 Heated Product Thermistor Sensors, SP-BLH

Wire according to Drawing 61423 & 61424 (SJ-6S Socket). Drawing located in Appendix.

6.4 Loading Rack Equipment Installation

The single channel ST-15 monitor used is wired to the plug and cable assembly according to the documentation listed in this manual.

6.4.1 SC-6A Plug and Cable Assemblies

Use wiring shown on DWG. 61424 (SC-6A) in Appendix. This wiring is typical of any single channel ST-15 series module. The factory installed jumper connected between TB2 terminals 1 and 2 on the sensor terminal strip is left in place. A three-wire connection to the plug and cable assembly is required for the SC -6A. The jumper wire between TB2 terminals 1 and 2 on the ST-15 module's terminal strip is left in place. However, if the tankers are equipped with an SP-BLH sensor, the factory jumper wire must be removed.

6.4.2 SC-1 Series Plug and Cable Assemblies

This series of four pole plug and cable assemblies, shown in DWG. 61425 in the Appendix, are wired to the sensor connection terminals on the ST-15 module in the ST-15 monitor. A three-wire connection to the plug and cable assembly is required for the SC-1. The factory installed jumper wire between TB2 terminals 1 and 2 on the ST-15 module's terminal strip is left in place. If the tanker or portable sensor is equipped with a SP-BLH sensor, the jumper wire must be removed.

6.4.3 SJ-4R and SJ-4D Sockets

A three-wire connection to the socket is required. The factory installed jumper wire between TB2 terminals 1 and 2 on the ST-15 module's terminal strip is left in place. If the tanker or portable sensor is equipped with an SP-BLH sensor, the jumper wire must be removed.

7.1 DWG 61420 - Thermistor Sensor And Uniprobe Resistance Measurements

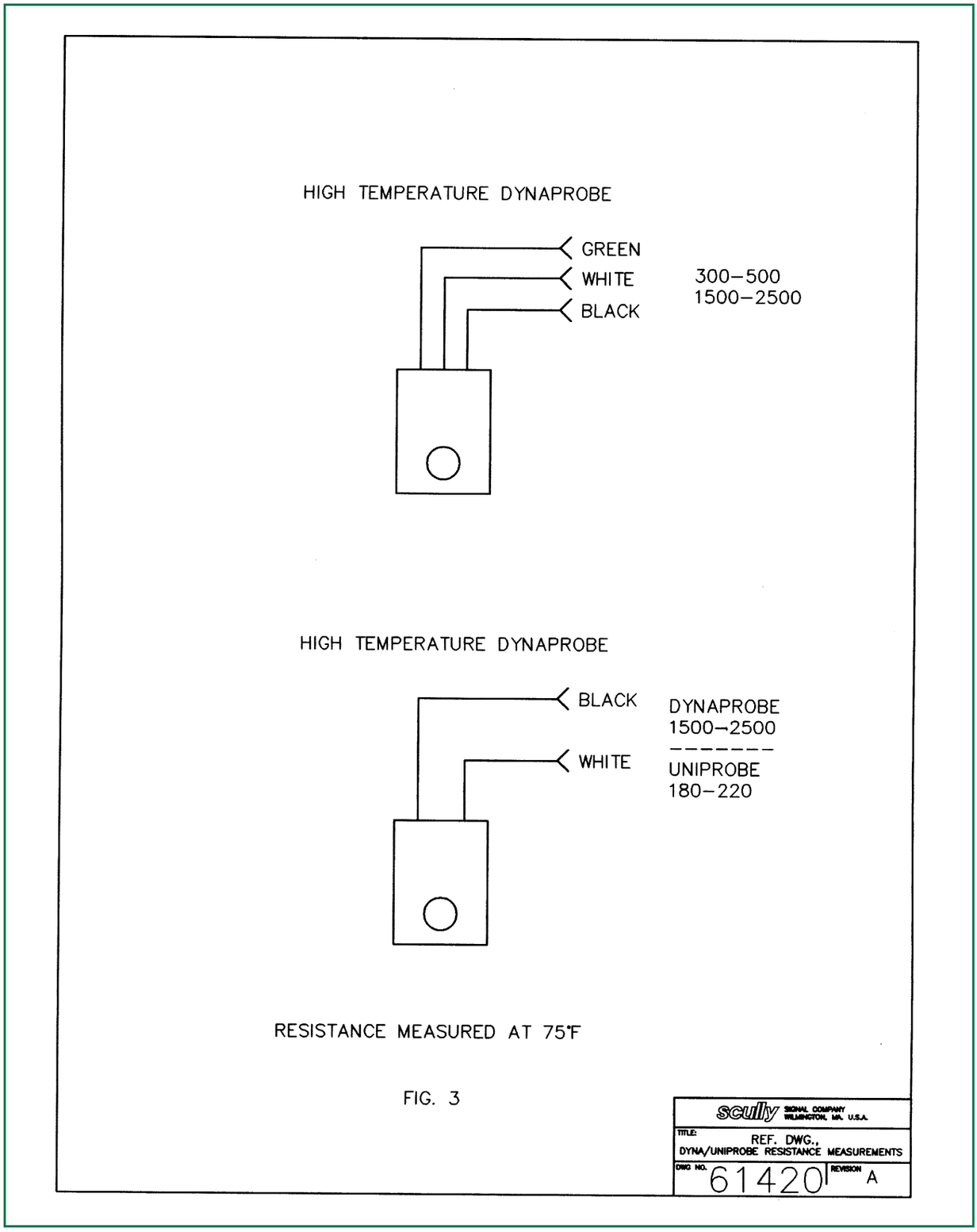

7.2 DWG. 20269 - Outline Drawing ST-15-115H Module

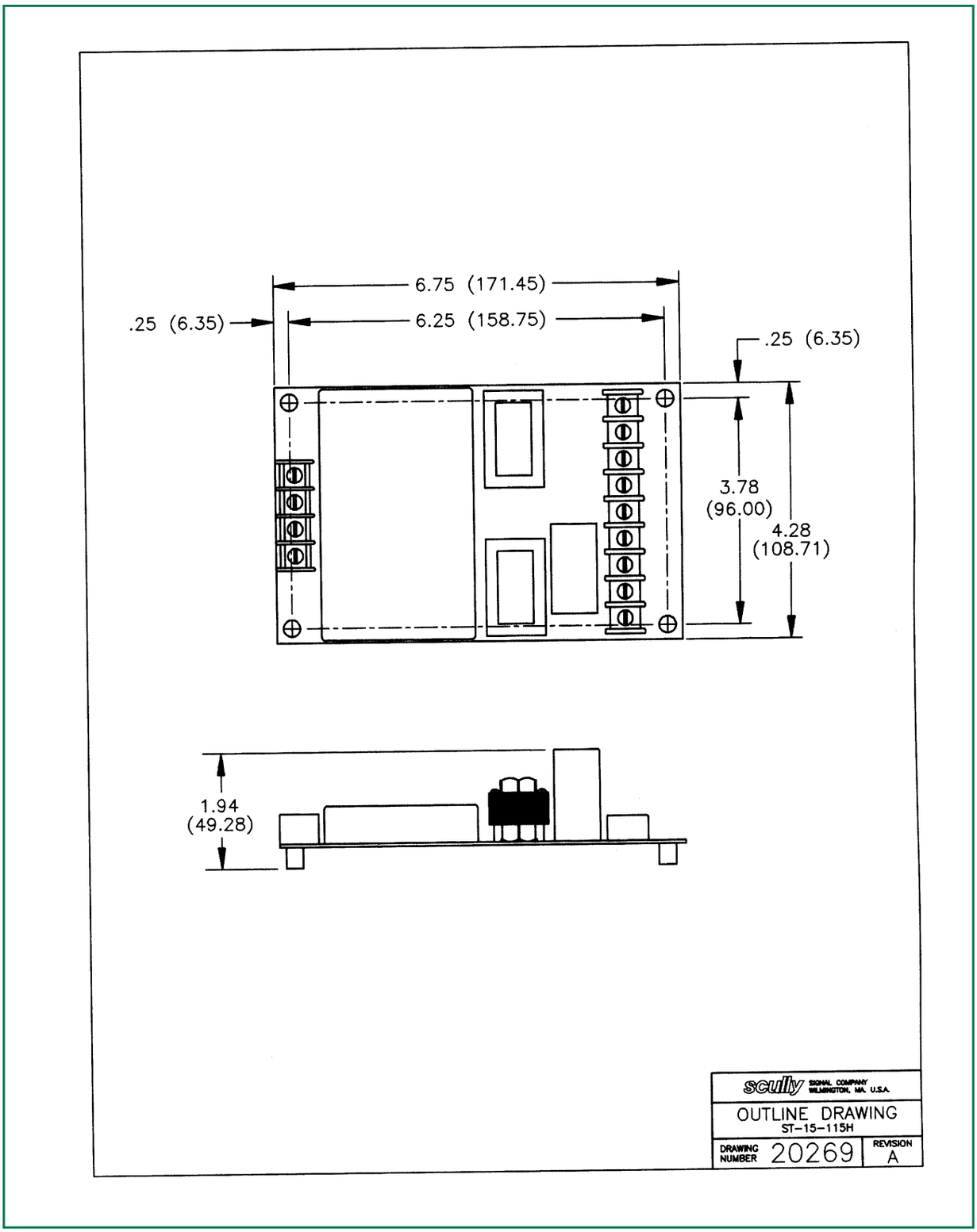

7.3 DWG. 61421 - Internal Wiring Diagram ST-15-120/240 EL

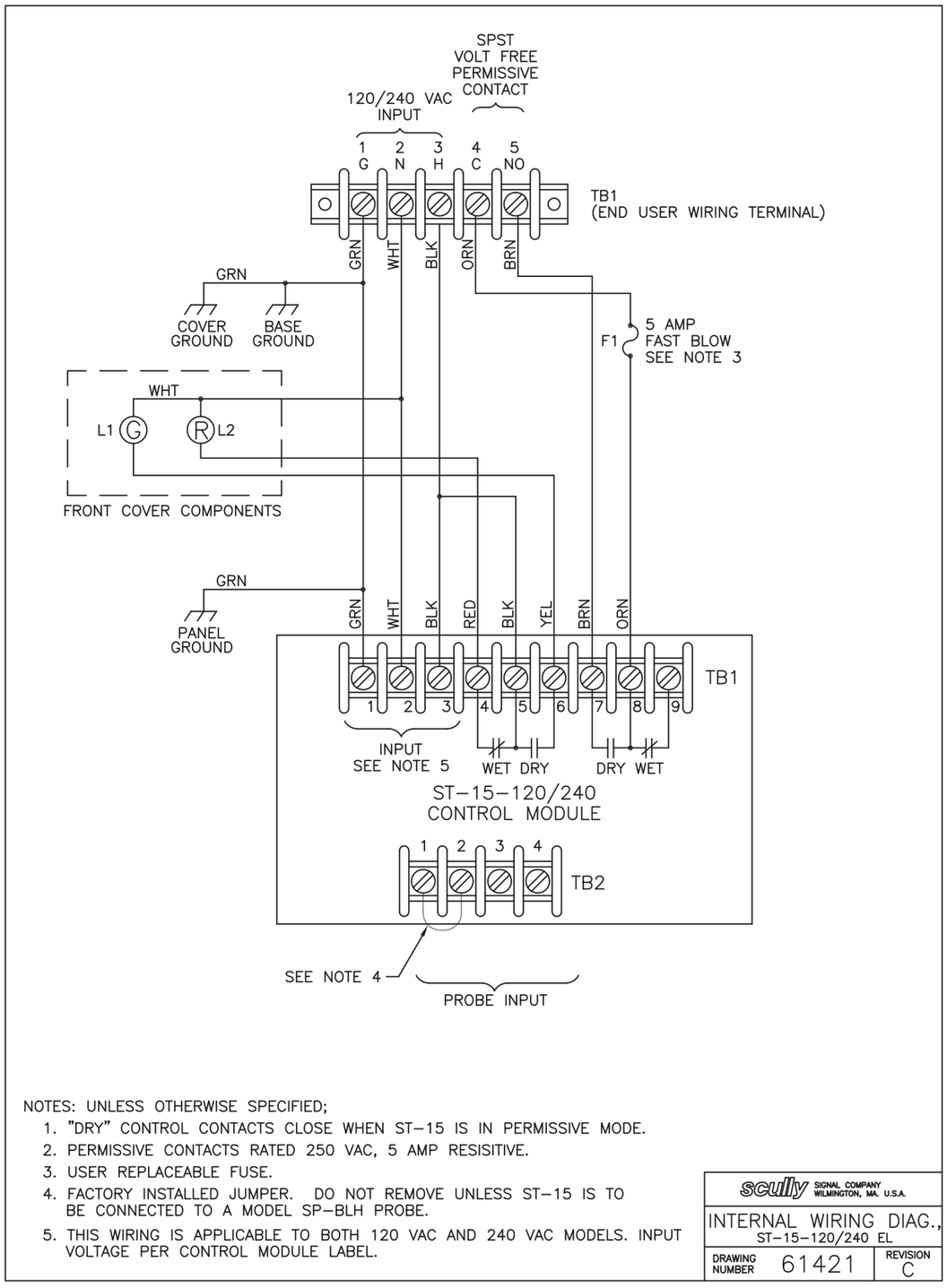

NOTES: UNLESS OTHERWISE SPECIFIED;

1. "DRY" CONTROL CONTACTS CLOSE WHEN ST–15 IS IN PERMISSIVE MODE.
2. PERMISSIVE CONTACTS RATED 250 VAC, 5 AMP RESISITIVE.
3. USER REPLACEABLE FUSE.
4. FACTORY INSTALLED JUMPER. DO NOT REMOVE UNLESS ST–15 IS TO BE CONNECTED TO A MODEL SP–BLH PROBE.
5. THIS WIRING IS APPLICABLE TO BOTH 120 VAC AND 240 VAC MODELS. INPUT VOLTAGE PER CONTROL MODULE LABEL.

scully SIGNAL COMPANY WILMINGTON, MA. U.S.A.	
INTERNAL WIRING DIAG., ST–15–120/240 EL	
DRAWING NUMBER 61421	REVISION C

7.4 DWG. 61422 - Internal Wiring Diagram, ST-15-115/240 ELK

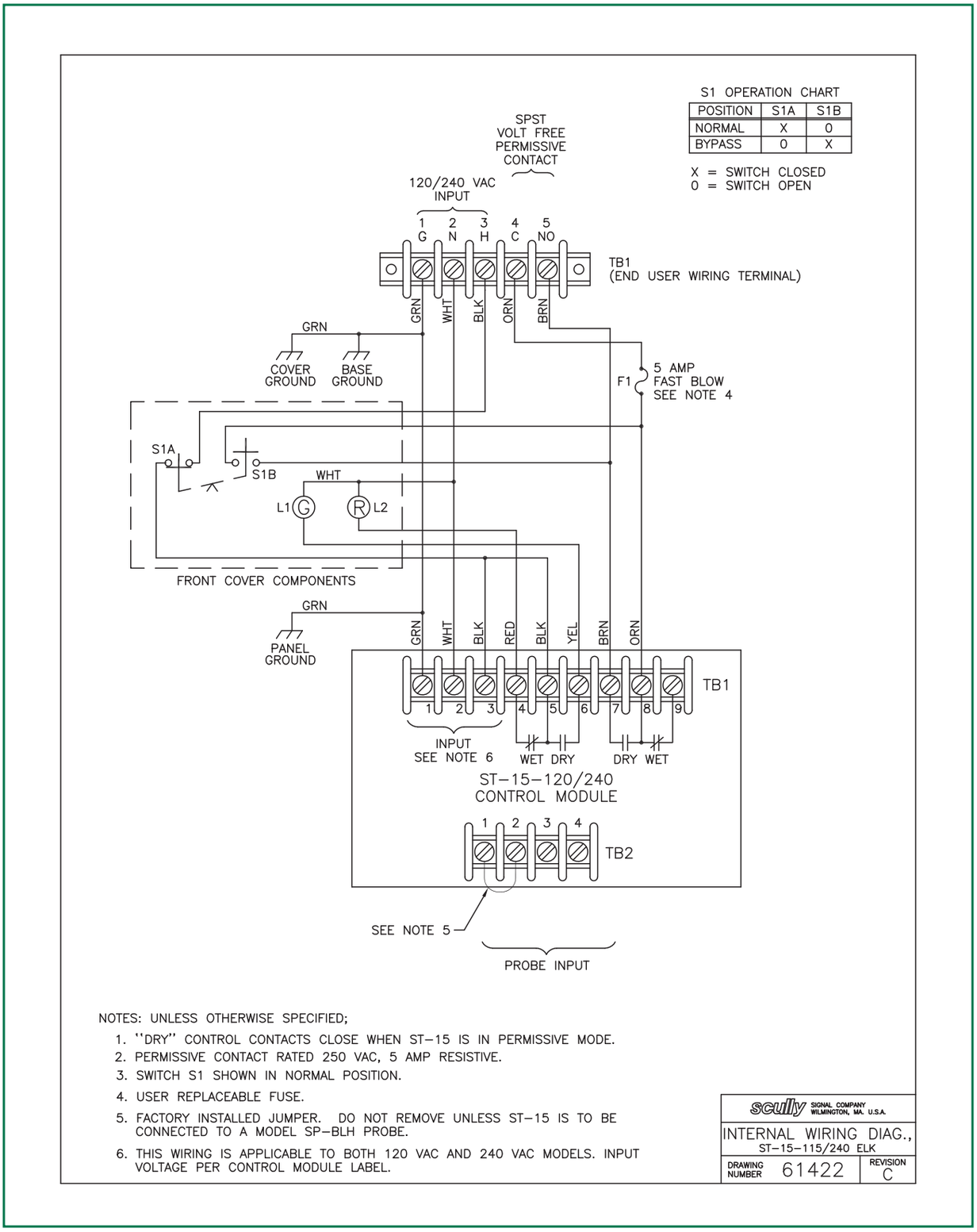

7.5 ST-15 Outline Drawing

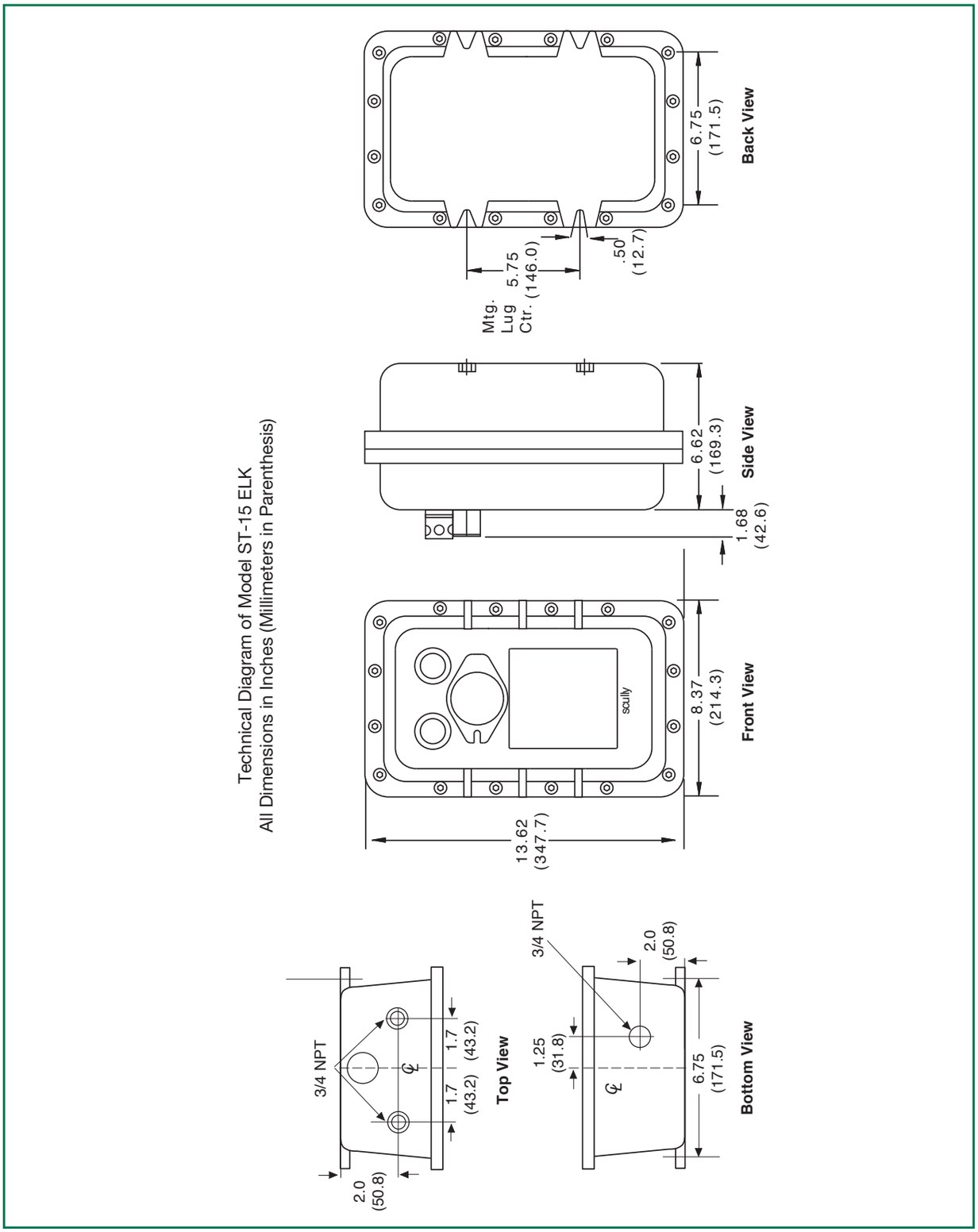

7.6 DWG 61423 - Field Wiring Diagram, ST-15 Direct Sensor Wiring

NOTES:

1. DO NOT REMOVE FACTORY INSTALLED JUMPER WHEN CONNECTING TO A TWO–WIRE SENSOR.
2. REMOVE FACTORY INSTALLED JUMPER BETWEEN TERMINALS 1 AND 2 WHEN CONECTING TO A THREE–WIRE SENSOR, MODEL SP–BLHK.

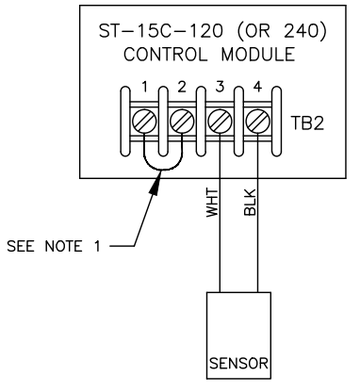

TYPICAL TWO–WIRE SENSOR WIRING

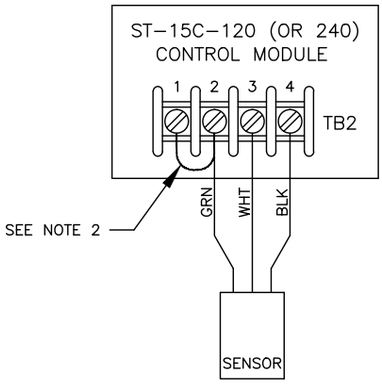

TYPICAL THREE–WIRE SENSOR WIRING

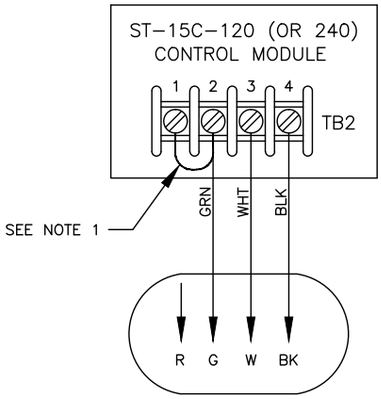

WIRING TO SCULLY SOCKETS
MODELS SJ–4D OR SJ–4R

scully SIGNAL COMPANY WILMINGTON, MA. U.S.A.	
FIELD WIRING DIAGRAM ST–15 DIRECT SENSOR WIRING	
DRAWING NUMBER 61423	REVISION B

7.7 DWG. 61424 - Field Wiring Diagram, ST-15 with SC-6A

NOTES: UNLESS OTHERWISE SPECIFIED;

1. SEAL FITTINGS MUST BE INSTALLED WITHIN 18 INCHES OF AN EXPLOSION–PROOF ENCLOSURE IN A HAZARDOUS LOCATION.
   IMPORTANT:
   INTRINSICALLY SAFE AND NON–INTRINSICALLY SAFE WIRING MUST ALWAYS BE SEPARATED AND RUN IN SEPARATE CONDUITS.
2. WIRE TO BE 18 AWG MINIMUM, STRANDED AND TINNED. COLOR OF WIRES SHOULD MATCH CONTROLLER TERMINAL COLORS IF POSSIBLE. IN ALL CASES WIRING MUST MEET APPLICABLE NATIONAL, STATE AND LOCAL CODES.
3. OTHER SCULCON MODELS CAN BE USED. CONSULT FACTORY FOR DETAILS.
4. INTERCONNECTION WIRING MUST NOT BE ALLOWED TO PASS THROUGH THE ST–15 HOUSING. UNDER NO CIRCUMSTANCES IS THE HOUSING TO BE USED AS A JUNCTION BOX. CONTROL (NON I.S.) WIRING MUST PASS IN AND OUT OF THE TOP CONDUIT ENTRY PORTS AND INTRINSICALLY SAFE (I.S.) WIRING MUST EXIT ONLY FROM THE BOTTOM CONDUIT ENTRY.
5. FACTORY INSTALLED RESISTOR. DO NOT REMOVE UNLESS ST–15 IS TO BE CONNECTED TO A MODEL SP–BLH PROBE.
6. INPUT VOLTAGE DEPENDS ON ST–15 MODEL CHOSEN.

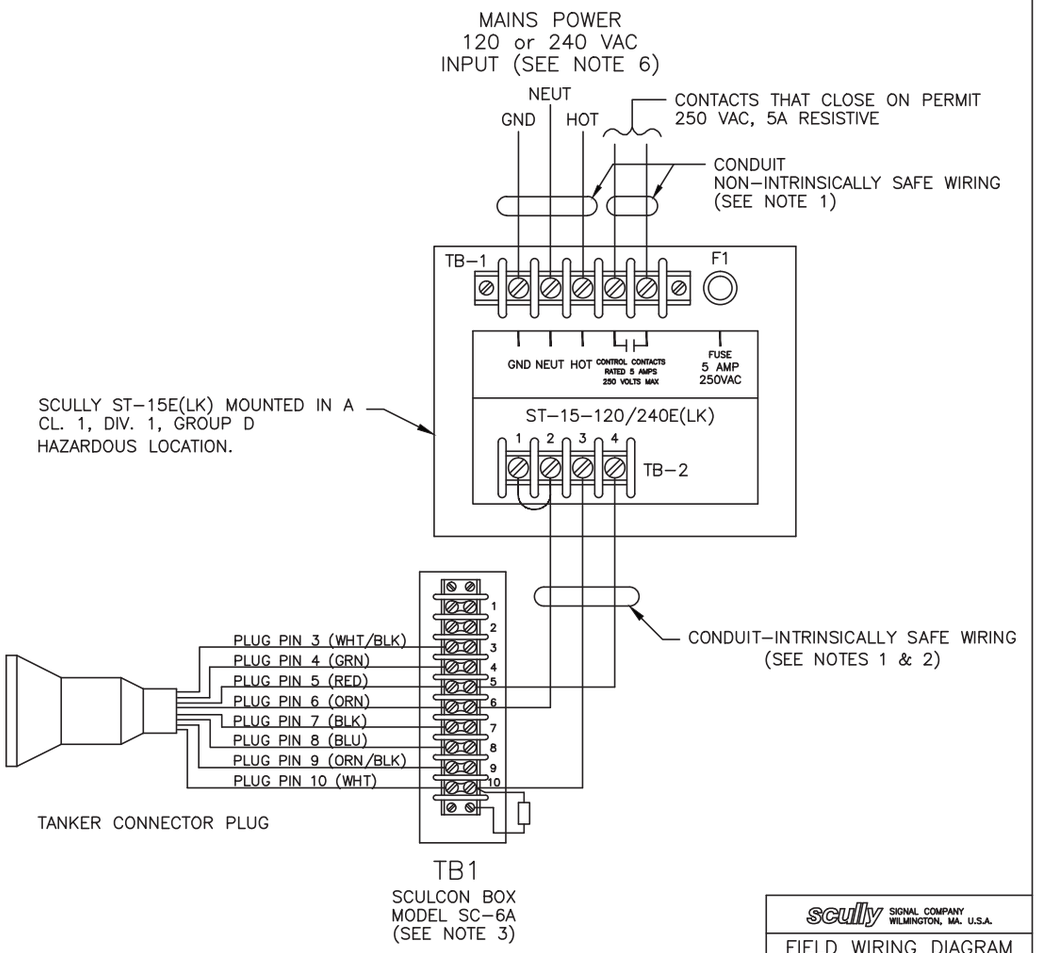

7.8 DWG 61425 - Field Wiring Diagram, ST-15 with SC-1

NOTES: UNLESS OTHERWISE SPECIFIED;

1. SEAL FITTINGS MUST BE INSTALLED WITHIN 18 INCHES OF AN EXPLOSION–PROOF ENCLOSURE IN A HAZARDOUS LOCATION.
   IMPORTANT:
   INTRINSICALLY SAFE AND NON–INTRINSICALLY SAFE WIRING MUST ALWAYS BE SEPARATED AND RUN IN SEPARATE CONDUITS.
2. WIRE TO BE 18 AWG MINIMUM, STRANDED AND TINNED. COLOR OF WIRES SHOULD MATCH CONTROLLER TERMINAL COLORS IF POSSIBLE. IN ALL CASES WIRING MUST MEET APPLICABLE NATIONAL, STATE AND LOCAL CODES.
3. OTHER SCULCON MODELS CAN BE USED. CONSULT FACTORY FOR DETAILS.
4. INTERCONNECTION WIRING MUST NOT BE ALLOWED TO PASS THROUGH THE ST–15 HOUSING. UNDER NO CIRCUMSTANCES IS THE HOUSING TO BE USED AS A JUNCTION BOX. CONTROL (NON I.S.) WIRING MUST PASS IN AND OUT OF THE TOP CONDUIT ENTRY PORTS AND INTRINSICALLY SAFE (I.S.) WIRING MUST EXIT ONLY FROM THE BOTTOM CONDUIT ENTRY.
5. FACTORY INSTALLED RESISTOR. DO NOT REMOVE UNLESS ST–15 IS TO BE CONNECTED TO A MODEL SP–BLH PROBE.
6. INPUT VOLTAGE DEPENDS ON ST–15 MODEL CHOSEN.

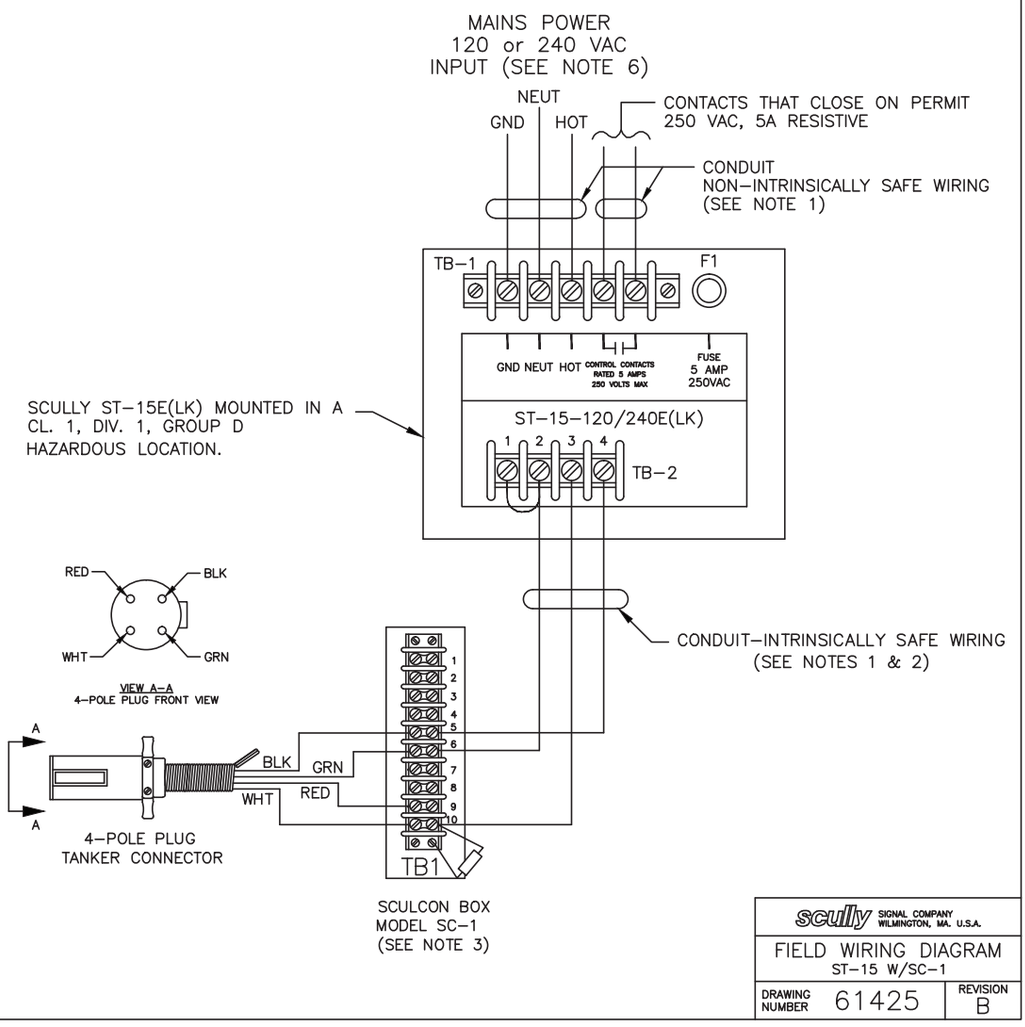

7.9 DWG. 61201 - Replacement Parts Diagram, ST-15 115VAC

ST-15 115VAC

Single Point Thermister Controller

Part No.	Model
07528	ST-15-115 EL
07677	ST-15-115 ELK

Note: Controller Models Suffix:
Explosion-proof housing (E), Indicator Lights (L),
Key (K) Lockable Bypass Switch.

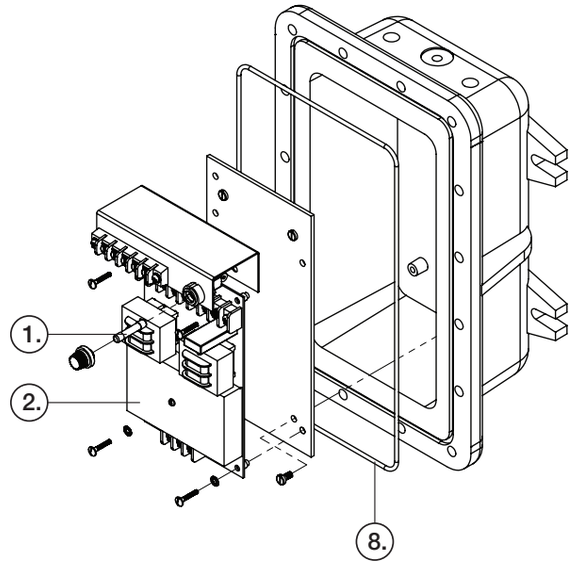

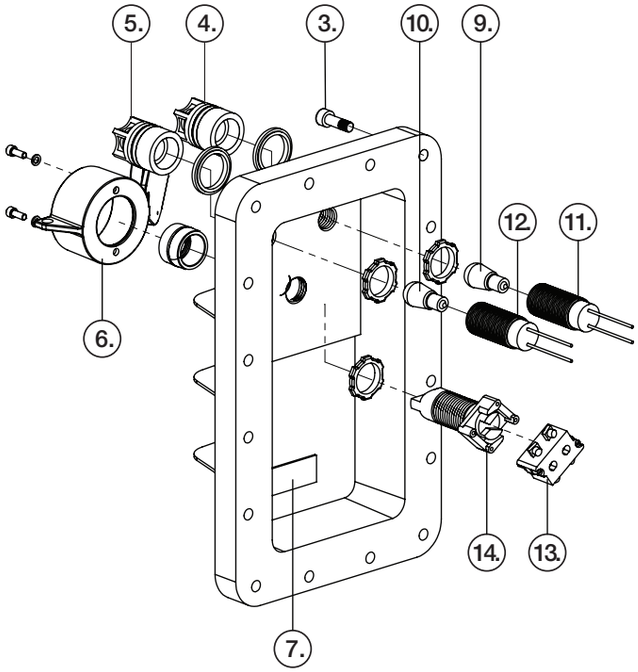

Replacement Parts

Item	Part No.	Description	Qty.
1	26311	Mains Fuse, 5 Ampere	1
2	08756	ST-15C-115H Circut Module	1
3	50041	Screw, Hex Head	16
4	09124	Red Replacement Head and Guard Assembly	1
5	09125	Green Replacemnt Head and Guard Assembly	1
6	08360	Bypass Switch Lock Box (includes 2 mounting screws)	1
7	21733	Corrosion Capsule	1
8	31340	O-ring cover seal	1
9	09384	LED- Red	1
10	09385	LED- Green	1
11	08343	Pilot Light Replacement Kit Red (includes 5,9)	1
12	08342	Pilot Light Replacement Kit Green (includes 5,9)	1
13	26022	Bypass Switch Contact Block	1
14	26055	Bypass Switch Operator 3-Position	1

Notes:
Item 3: Hex head screw used on models built after 10/92.
Item 8: O-ring used on models built after 10/92

61201 Rev C
October 2014

7.10 DWG. 61561 - Replacement Parts Diagram, ST-15 240VAC

ST-15 240VAC

Single Point Thermister Controller

Part No.	Model
07640	ST-15-240 EL
07547	ST-15-240 ELK

Note: Controller Models Suffix:
Explosion-proof housing (E), Indicator Lights (L), Key (K) Lockable Bypass Switch.

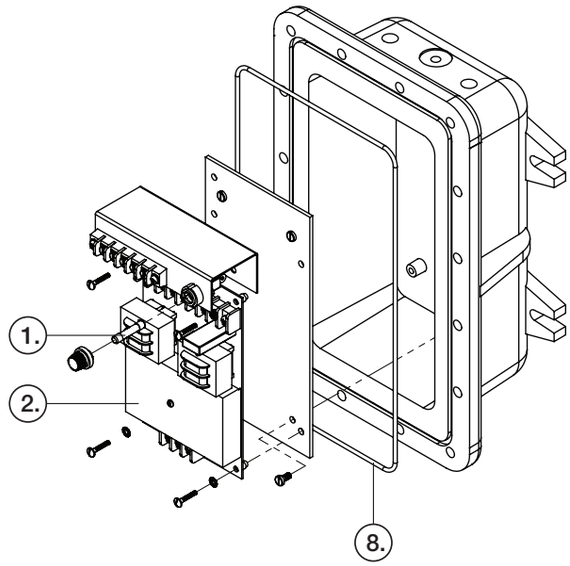

Replacement Parts

Item	Part No.	Description	Qty.
1	26311	Mains Fuse, 5 Ampere	1
2	08656	ST-15C-240H Circut Module	1
3	50041	Screw, Hex Head	16
4	09122	Red Replacement Head and Guard Assembly	1
5	09123	Green Replacemnt Head and Guard Assembly	1
6	08360	Bypass Switch Lock Box (includes 2 mounting screws)	1
7	21733	Corrosion Capsule	1
8	31340	O-ring cover seal	1
9	27006	Bulb, 250V, 10W	2
10	08346	Pilot Light Replacement Kit Red (includes 4,9,10)	1
11	08345	Pilot Light Replacement Kit Green (includes 5,9,11)	1
12	26022	Bypass Switch Contact Block	1
13	26055	Bypass Switch Operator 3-Position	1

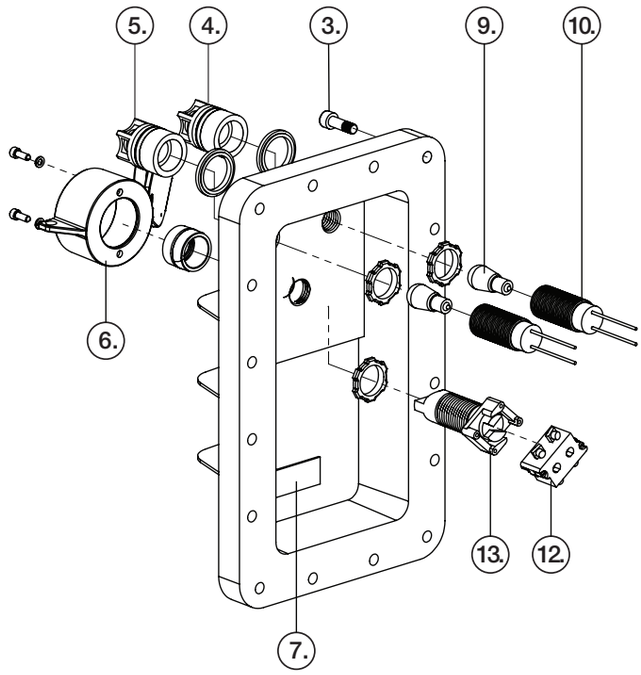

Notes:
Item 3: Hex head screw used on models built after 10/92.
Item 8: O-ring used on models built after 10/92

61561 Rev A
October 2014

ST-15 OVERFILL PREVENTION SYSTEM FUNCTIONAL TEST CHECKLIST

This test is intended to be used as part of commissioning a completed Scully ST-15 WX or ST-15Exx system, but can be used as a pre-installation checklist or for any periodic functional verification.
For systems requiring IEC 61508 or IEC 61511 Functional Safety Proof Testing, please refer to to The Scully ST-15 Safety Manual PN 61626.

System Model Name:

System Model Number:

System Serial Number:

Customer Name and Site Address:

Step	Action	Chan 1	Chan 2	Chan 3	Chan 4	Chan 5	Chan 6	Chan 7	Chan 8	Chan 9	Chan 10	Chan 11	Chan 12
1	Confirm that the control module is indicating a dry condition (output relay closed).												
2[a]	Bypass the safety function and take appropriate action to avoid a false trip.												
3[b]	On WX systems, remove power from the WX relay of the channel under test. Confirm that the relay opens within one (1) second. Reconnect power.												
4	Disconnect one of the wires to the sensor. Confirm that the relay opens within one (1) second. Reconnect sensor.												
5	Short the sensor inputs at the ST-15 module together. Confirm that the relay opens within one (1) second. Remove short.												
6[c]	Wet-test the sensor by submersing the tip in a dark liquid (such as coffee). Confirm that the relay opens within one (1) second. Remove sensor from liquid and confirm that the relay closes.												
7	Remove the bypass and otherwise restore normal operation												

[a]Step 2 implies that the output relay may be bypassed prior to testing. This can only be done if site policies allow for the safety function to be bypassed.

[b]On single point systems in explosion-proof housings, disconnect power to the module and confirm that the output relay is open. Reconnect power before proceding.

[c]If it is impractical to immerse the sensor associated with the channel under test due to installation limitations, it is acceptable to use a representative sensor to test the individual channels in the cabinet. HOWEVER: the sensors must still be tested to confirm proper operation independently. Contact Scully for guidance.

Scully - Setting Standards in Safety and Dependability since 1936.

For over seventy-five years Scully has been engineering and building products to the highest safety and reliability standards. We design and manufacture all of our systems under one roof to ensure complete quality control over our manufacturing and testing operations. Scully is ISO certified and all of our products are 100% made in the U.S.A. In addition, we back up our products with the best service in the industry. We have direct sales and service personnel in the U.S.A., The United Kingdom, and Europe and are represented in over 50 countries.

For more information and 24 hour technical assistance, call Scully Signal Company at 1-800-2SCULLY (1-800-272-8559).

Scully Headquarters in Wilmington, MA U.S.A.

Copyright © 2020 Scully Signal Company. MaxSafety, Sculcon and Scully are registered trademarks of Scully Signal Company. The names and logos of other companies mentioned herein may be trademarkes of their respective owners. This document is for informational purposes only. Scully makes no warranties, expressed or implied, in this document. All Rights Reserved. Specifications are subject to change without notice.

60905 Rev S
September 2020

Scully Signal Company
70 Industrial Way
Wilmington, MA 01887, USA
800 272 8559 • sales@scully.com

Scully Systems Europe NV
Maanstraat 25
2800 Mechelen, Belgium
+32 (0) 15 56 00 70 • info@scully.be

Scully UK Ltd
Meridian House, Unit 33
37 Road One Winsford Industrial Estate,
Winsford Cheshire CW7 3QG, UK
+44 (0) 1606 553805 • sales@scullyuk.com

Dynamic Self-Testing® Overfill Prevention Systems