Scully ST-47 Groundhog

Technical Manual

ST-47 Series Self-Proving Vehicle Grounding Verification System

scully

Scully Signal Company 70 Industrial Way, Wilmington, MA 01887, USA • 800-272-8559 • sales@scully.com • www.scully.com

Table of Contents

General 5.

1.1 ***Purpose of Equipment***

1.2 ***ST-47 Normal Operation***

Technical Specifications & Approvals 9.

2.1 ***Input Power***

2.2 ***Control Contact***

2.3 ***Operating Temperature***

2.4 ***FM Approval & FM Approval for Canada***

Installation 10.

3.1 ***Enclosure***

3.2 ***Physical Location***

3.3 ***Electrical Installation***

3.4 ***Ground Ball Installation- Stand Alone Applications***

3.5 ***Ground Bolt Installation- Combined with Rack Monitor***

Initial System Checkout 11.

4.1 ***General***

4.2 ***Models Without Bypass Switch***

4.3 ***Models With Bypass Switch***

4.4 ***Models With Deadman Feature***

Servicing The ST-47 12.

5.1 ***General***

5.2 ***Replacing Indicator Lamps***

5.3 ***Tools & Test Equipment Required for Servicing***

5.4 ***Test Procedure 1- Wire-Through Applications Only***

5.5 ***Test Procedure 2- Stand Alone Applications Only***

5.6 ***Troubleshooting Models With Deadman Capability***

Table of Contents

Diagram Appendix

6.1	***DWG 61655 – Installation Drawing with Entity Parameters***	17.
6.2	***DWG 31412 – Outline Drawing – Control Unit Enclosure***	18.
6.3	***DWG 63039 – Outline Drawing – Sculcon Junction Box***	19.
6.4	***DWG 61441 – Wiring Diagram – Typical Loading Rack Control***	20.
6.5	***DWG 61345 – Principle of Overfill Prevention & Grounding***	21.
6.6	***DWG 61346 – Grounding Protection for Product Loading & Offloading***	22.
6.7	***DWG 61442 – Mounting Diagram – Control Unit & Junction Box***	23.
6.8	***DWG 61334 – Internal Wiring Diagram ST-47-EL***	24.
6.9	***DWG 61333 – Internal Wiring Diagram ST-47-ELK***	25.
6.10	***DWG 61331 – Internal Wiring Diagram ST-47-EL/D***	26.
6.11	***DWG 61332 – Internal Wiring Diagram ST-47-ELK/D***	27.
6.12	***DWG 61121 – Field Wiring Diagram ST-47-115/240 EL(K)***	28.
6.13	***DWG 61099 – Field Wiring Diagram ST-35/ST-47***	29.
6.14	***DWG 61098 – Field Wiring Diagram ST-15/ST-47***	30.
6.15	***DWG 61141 – Field Wiring Diagram ST-47-115 EL(K)D***	31.
6.16	***DWG 61168 – Field Wiring Diagram ST-15-ELK & ST-47-ELK/D***	32.
6.17	***DWG 61167 – Field Wiring Diagram ST-15-ELK & ST-47-ELK/D***	33.
6.18	***DWG 61169 – Field Wiring Diagram ST-35-ELK & ST-47-ELK/D***	34.
6.19	***DWG 61202 – Replacement Parts for ST-47-115***	35.
6.20	***DWG 61273 – Replacement Parts for ST-47-240***	36.

1.1 Purpose Of Equipment

The ST-47 Groundhog is a line powered, Self- Proving, Vehicle Ground Verification System. It may be used to insure a safe ground between a terminal loading rack and a tank vehicle which is in the process of loading or unloading a hazardous product. The Groundhog system can be used in one of three modes: 1.) Wire-Through, 2.) Stand -Alone, 3.) Non Self-Proving. Optional front cover lamps indicate grounded (green lamp on) or non-grounded (red lamp on) status. Intrinsically safe ground verification signals connect to TB2 terminals 2 (ground) and 3 (proving signal) in modes 1 and 2. Refer to Figure 1.2 for ST-47 Terminal Block (TB) locations.

1.1.1 Wire-Through Mode Description

In the Wire-Through configuration, the ST-47 control monitor is ideally mounted near a new, or existing, Scully overfill prevention monitor (see Appendix for appropriate interconnection wiring diagram). When the two monitors are located in close proximity, vehicle drivers or loader personnel can easily view the status lamps.

Two wires from the ST-47 I.S. terminals connect to the new, or existing, overfill prevention cable junction box. A single Scully Ground Bolt, mounted on a tank vehicle (or other container), serves as the truck ground verification point. The system is self-proving when the overfill prevention plug is connected to the vehicle mounted Ground Bolt (P/N 08560) through socket pin no. 9.

A time-varying intrinsically safe voltage is sent out on ST-47 TB2 terminal 3. With the Scully overfill protection plug connected to the vehicle mounted overfill system socket, a ground connection is established through pin 10 of the socket to the chassis of the vehicle. The ground proving signal enters the socket through pin 9. The Ground Bolt is required to complete the circuit in the ST-47 controller. The circuit is completed through pin 9, through the green wire, through the Ground Bolt, to the chassis of the vehicle or equipment, through pin 10 and back to the ground connection, TB2 terminal, at the controller. If the control monitor senses a complete signal path, it will close its “permissive” contact. The permissive contact is typically used to control a pump, valve, or input to a Terminal Automation System or Programmable Logic Controller (PLC).

1.1.2 Stand Alone Mode Description

Used in the Stand-Alone mode, the ST-47 Groundhog is typically mounted near the terminal rack equipment and hard wires to the Scully Model SC-47CC or SC-47CC/D cable junction box. The cable junction box contains terminals connecting to a special snap-on plug using a 32 foot (ten meter) coiled or a 20 foot (six meter) straight cable. A single Scully Ground Ball mounted on a tank vehicle serves as the truck ground verification point. The system is self-proving when the snap-on plug is connected to the vehicle mounted Ground Ball. When connected, the ST-47 sends a time-varying intrinsically safe voltage from TB2 terminal 3 to the top of the two piece Ground Ball and through the frame of the vehicle. The ball returns a portion of the signal to the control monitor TB2 terminal 2 through its base. If the control monitor senses this signal, it will close its “permissive” contact. The permissive contact is typically used to control a pump, valve, or input to a Terminal Automation System.

1.1.3 Deadman Capable Model Description

(Applies to Models ST-47 EL(K)/D) Deadman capable models of the ST-47 differ from standard models in two ways

1.) The Model ST-47/D requires the use of a Scully deadman equipped plug and cable or ground ball connector and cable assemblies (Model SC-47CC/D). These include a hand-operated deadman switch added to a standard plug and cable assembly.
Two additional wires must be run in the intrinsically Safe (I.S.) conduit which connects the ST-47/D to the plug and cable assembly.

2.) Unlike the standard Model ST-47 there is no volt free permissive contact connected to TB1 terminals 4 and 5. Only the permissive contact of TB1 terminal 5 can be utilized and it must be connected to one wire (AC hot) of an inductive or resistive external device. The other wire of the inductive or resistive external device is connected to AC neutral. In normal operation, the deadman switch must be operated to “permit” operation of the external device. When the ST-47 is permissive (green lamp lit), and the deadman switch is operated, the external device connected to TB1 terminal 5 is energized.

1.2 ST-47 Normal Operation

1.2.1 Status Lamps

Match the state of the front cover indicators on the Groundhog with the chart below. Determine if the status meets the conditions present and refer to the Troubleshooting Section of this manual if required.

LAMP STATUS		
RED	**GREEN**	**INDICATION**
OFF	ON	Rack to vehicle, rail tank car, container, etc. ground bond verified. Output is “Permissive”
ON	OFF	Rack to vehicle, rail tank car, container, etc. ground bond not verified or unit is malfunctioning. Output is “Non-Permissive”
OFF	OFF	1.) Indicator lamp(s) is/are burned out. 2.) The unit is not powered. 3.) Optional Bypass switch is in OFF or BYPASS position.

1.2.2 Use With Scully Ground Bolt or Ground Ball

A front panel mounted red lamp indicates that a safe ground attachment has not been made or, the ST-47 is not connected to a vehicle. After connection to a vehicle mounted Ground Ball or Ground Bolt the green lamp on the front panel illuminates indicating that the Scully Groundhog system is operational and the ground path to the vehicle is complete. A normally open user contact is provided on TB1 terminals 4 and 5, it should be connected to the permit circuitry at the terminal loading rack. The permit contacts close when the ground path to the vehicle is verified.

1.2.3 Optional Bypass Switch-Models ST-47-115 or 240 ELK

An optional, three position switch, is mounted on the front cover. It allows the system to operate normally in the AUTO (center position), turned OFF (left most position), or placed in BYPASS (right most position). In the Bypass mode, the user contact will "permit" but, both the red and green lamps will be extinguished.

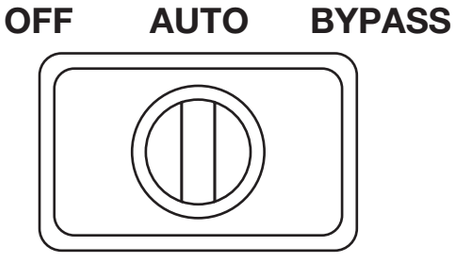

Figure 1.1 Bypass Switch Illustration (Shown in AUTO Position)

WARNING

With the OFF/ AUTO/ BYPASS Switch in the BYPASS Position,

THERE IS NO GROUND VERIFICATION PROTECTION.

1.2.4 Optional Deadman Capability-Models ST-47-115

1.2.4.1 Permissive Contact Connection to External Devices

Terminal 4 of TB1 is factory connected to the "hot" side of the AC power line. This factory installed jumper connecting TB1 terminals 3 and 4 can be removed if the end-user must isolate the permissive terminals. Do not exceed the following values for the permissive terminal input and output.

Operating and Load Voltage Range.....95 to 135 VAC
Load Current Maximum.....5 Amperes resistive

If connection is made to an external device which is neither resistive nor inductive, an interposing relay must be used. One example of this type of external device requiring an interposing relay is a Programmable Logic Controller (PLC). When using a relay, connect one wire of the device to TB1 terminal 5 and the other wire to AC neutral. In most instances a normally open contact of the relay is used. One "Common" contact should make connection to whatever voltage is required by the device to be activated. When the ST-47 is permissive, the interposing relay will energize, and operate an external device or devices.

1.2.4.2 Deadman Switch Connection to the ST-47

Two wires (black and white) are factory connected from the Deadman switch to terminals 1 and 2 inside the Scully plug and cable box. Applicable junction boxes may be identified by the "/D" in their Model designation. The end-user must provide wiring which connects the two terminals to TB3 inside (bottom) of the ST-47 explosion proof housing.

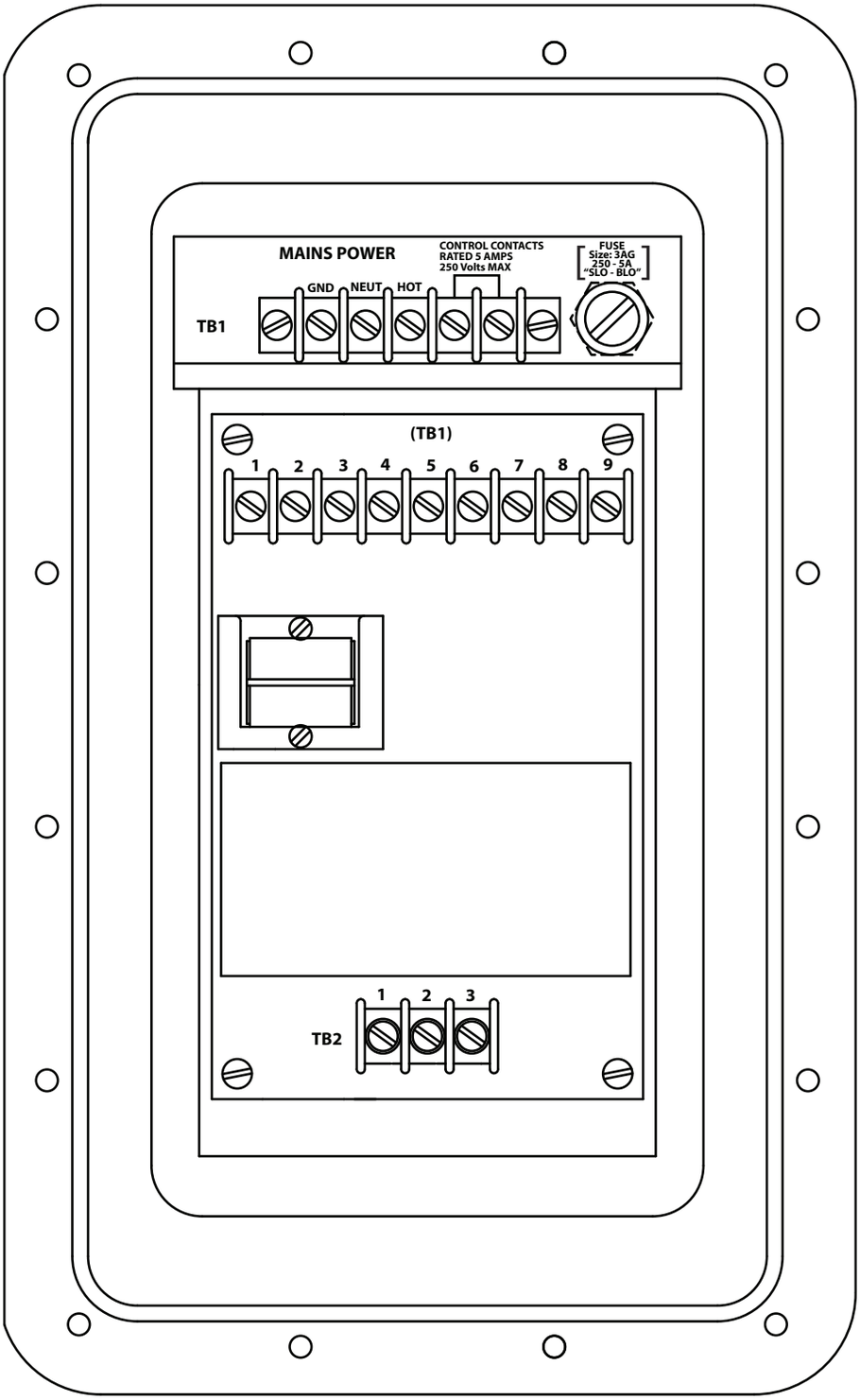

Figure 1.2 ST-47 Terminal Block Location Illustration

Technical Specifications and Approvals

2.1 Input Power

120 VAC +/- 15% or 208-240 VAC 50/60Hz
.25 Amps Maximum .125 Amps Maximum

2.2 Control Contact

Independently fused, 240 VAC
5 Amps resistive

2.3 Operating Temperature

-40 to +158 deg. F
(-40 to +70 deg. C)

2.4 FM Approval & FM Approval for Canada

This system's outputs have been FM Approved as Intrinsically Safe for Connection to Class I, Division 1, Groups C and D Hazardous Locations.

The Ground Ball or Ground Bolt may be mounted in a Class I, Division 1, Group C or D Hazardous Location.

The ST-47-115 EL(K) and ST-47-240 EL(K) may be mounted in a Class I, Division 1, Group C or D Hazardous Location.

3.1 Enclosure

The ST-47 is mounted in a NEMA 7 style explosion proof & weather proof enclosure that is typically located near other rack equipment. Refer to typical loading rack installation for suggested mounting.

3.2 Physical Location

a.) The front panel must be in the vertical position.
b.) The hinged front cover must be able to swing open for ease of servicing and chassis removal.
c.) The front panel indicators must be visible to the loader.

3.3 Electrical Installation

CAUTION

Keep the Intrinsically Safe Wiring SEPARATE from any Power and Control Circuit Wiring by Running them in Separate Conduits. No Wiring Should be Allowed to Pass Through from Top to Bottom of the ST-47 Enclosure.

Systems using an ST-47 controller are wired as shown on an appropriate diagram in the appendix.

3.4 Ground Ball Installation - Stand Alone Applications

Refer to installations packed with Ground Ball, Scully Drawing No.61067.

3.5 Ground Bolt Installation - Combined with Rack Monitor

Refer to installations packed with Ground Bolt, Scully Drawing No.61081.

4.1 General

(Refer to Figure 1.2 for Terminal Block & Fuse Locations)

Note: All Tests are done with line power applied to the ST-47.

CAUTION

Hazardous Voltages are Present Inside the ST-47 Explosion Proof Housing. When Working Inside the ST-47 Enclosure Avoid Contact with the TB1 Terminal Strip at the Top of the Housing

4.2 Models Without Bypass Switch (ST-47- 115 or 240 EL)

Remove all wiring from the I.S. Terminal Strip TB2. You may check operation of the Groundhog by physically shorting together terminals 1 and 2 on TB2 using a jumper wire. When this test is performed, the Permit light should illuminate and Permit contacts (TB1 terminals 3 and 4) should close. When the ST-47 is in the permissive mode any connected devices should activate. If the connected device does not activate, consult the Troubleshooting section of this manual.

4.3 Models With Bypass Switch (ST-47- 115 or 240 ELK)

Place the Bypass switch in the AUTO position (center position). Remove all wiring from the I.S. Terminal Strip TB2. You may check operation of the Groundhog by physically shorting together intrinsically safe terminals 1 and 2 on TB2. When the test is performed, the permit light should illuminate and the Permit contacts (TB1 terminals 4 and 5) should close. Place switch BYPASS position (to the right). When the switch is in the Bypass position, power is removed from the ST-47 electronics and the front cover status lamps. Verify that the red and green status lamps are extinguished and contacts TB1 terminals 4 and 5 are shorted. When the ST-47 is in the permissive mode any connected devices should activate. If the connected device does not activate consult the Troubleshooting section of this manual.

4.4 Models With Deadman Feature (ST-47- 115)

4.4.1 Models with Bypass Switch

To test the operation of the deadman switch, the ST-47 must be powered by the line voltage and the Bypass switch in the AUTO position. When the ST-47 is not connected to a vehicle, rail car, etc., the Red lamp on the front cover is lit. Connect the plug and cable or clamp to the vehicle to be grounded. If the vehicle ground is verified the Green lamp on the front cover lights. If the Green lamp does not light refer to previous sections 4.1 to 4.3.

Operate the deadman handle, the external device connected to the ST-47 permissive output will activate. When the ST-47 is in the permissive mode any connected devices should activate. If the connected device does not activate consult the Troubleshooting section of this manual.

4.4.2 Models without Bypass Switch

Perform the test as in paragraph 4.2 by applying power to the ST-47. Applying power is equivalent to placing the Bypass switch in the AUTO position. When the ST-47 is in the permissive mode any contact devices should activate. If the connected device does not activate consult the Troubleshooting section of this manual.

5.1 General

Unless noted otherwise, all the following Procedures are done with power applied to the ST-47. AC power, as measured on the TB1 terminals 2 (neutral) and 3 hot) must be within the specified tolerances. If it is not, correct the line voltage problems.

Returning part to Scully for repair or Warranty consideration: *Before returning any defective equipment to the Scully Signal Company for repair and/or Warranty consideration, call Scully at 1.800.272.8559 for an RMA (Return Material Authorization) number.*

5.2 Replacing Indicator Lamps

5.2.1 Models with Bypass Switch

Turn off the power to the Groundhog by moving the switch to the far left position. Unscrew the lamp lens, remove the defective bulb by unscrewing the lamp in the counter-clockwise direction. Insert a new lamp by reversing the preceding procedure.

Current ST-47-115 models are shipped with LED fixtures installed. There are seperate part numbers for the green replacement LED (09385) and the red replacement LED (09384). Older models using incandescent lamps can be upgraded by replacing the lamp assembly.

5.2.2 Models without Bypass Switch

Remove the line power from the Groundhog and replace the defective lamp using the procedure in section 5.2.1.

5.3 Tools & Test Equipment Required for Servicing

5.3.1 Tools

a.) Good quality multi-meter
b.) Flat-blade screwdriver
c.) Two sets of Jumper wires with alligator clips at each end

5.3.2 Required Test Equipment for Wire-Through Mode Operation

Use appropriate equipment from the list below:
a.) Scully Universal Loading Rack Tester, ST-2-DSWJ
b.) Scully Ground Bolt (Part 08560) or Scully Ground Ball (Part 08274)

5.3.3 Required Test Equipment for Stand-Alone Mode Operation

a.) Scully Ground Bolt (Part 08560) or Scully Ground Ball (Part 08274)

5.4 Test Procedure 1 - Wire-Through Applications Only

Problem: The overfill prevention plug is connected to the tanker mounted overfill prevention system and the RED non-permit lamp stays on. Unit does not "permit" externally connected devices.

TIP

Overfill Plug Pin Identification- Orient plug with pins facing you and the molded-in arrow positioned at 12 o'clock, Pin 1 is located where the arrow points. Count pins from Pin 1 in a clockwise direction. Pin 9 is in the center on the left. Pin 10 is in the center on the right

Procedure 1, Step A

Does the tanker have a Scully Ground Bolt installed and wired to Pin 9 of the overfill prevention Socket?

YES	*NO*
Go to the next step	Install Ground Bolt on tanker (Scully Part# 08560)

Procedure 1, Step B

If you have a Scully Rack Tester, plug the overfill prevention cable into the socket on the tester. If you do not have a tester but do have a Scully Ground Bolt, use jumper wires to connect the green wire on the bolt to Pin 9 of the plug and connect the body of the bolt to Pin 10

.

Does the ST-47 Permit?

YES	*NO*
Trailer grounding system is at fault. Have tanker owner check the installation or, contact the Scully Service Department for assistance.	Go to the next step

Procedure 1, Step C

Using a Multi-Meter set on DC volts measure the voltage between Pin 9 (+) and Pin 10 (-) of the overfill prevention plug.

Is the voltage between 11 and14 volts DC?

YES	*NO*
Go to the next step	Using an open end socket wrench, open the plug and cable junction box. Remove line power to the ST-47. Remove wires that come from the cable and are connected to terminals 9 and 10. Power the ST-47. Check the voltage at terminals 9 (+) and 10 (-) on the terminal block found inside. If you now read 11 and 14 VDC at terminals 9 and 10, there is a problem in the cable or wiring to the ground ball plug. Correct the problem. If you still get no voltage reading, go to the next step.

Procedure 1, Step D

Using the correct socket or hex wrench (Depends on ST-47 date of manufacture) remove the cover fasteners and open the front cover. Using a flat-blade screwdriver, remove the wires on intrinsically-safe terminals TB2-2 and TB2-3. Using a Multi-Meter set on DC volts, measure the DC voltage between terminals TB2-3 (+) and TB2-2 (-).

Is the voltage between 11 and 14 volts DC?

YES	*NO*
There is a wiring problem between the ST-47 TB-2 terminals and the Junction Box terminals. Correct the wiring problem	The ST-47 circuit module is defective. Replace the module with a new one or, return the board to the Scully Signal Company for repair or Warranty consideration.

5.5 *Test Procedure 2 - Stand-Alone Applications Only*

Problem: The Ground Ball plug is connected to the tanker mounted Scully Ground Verification Ball and RED non-permit lamp stays on. Unit does not "permit" externally connected devices.

TIP

Ground Ball Connector Plug Maintenance

1.) Spring Finger Tension- Older styles of the Plug used an O-ring to tension the gripping fingers which grip the base of the Ground Ball. The O-ring has been replaced by a new tensioning ring (part# 31673) which provides a more positive grip.

2.) Contact Plunger Sticking- Severe weather conditions can cause the stainless steel contact plunger (at the center, inside the plug) to stick in the down position. If it sticks it will make a poor connection to the head of the Ground Ball. If it sticks, disassemble the plug and apply white lube to the plunger where it contacts its plastic housing. To provide good contact with the ball it must spring in and out freely.

Procedure 2, Step A

This step requires a Scully Ground Bolt or Ground Ball for testing- if you do not have one, Go to Step A1. Use a jumper wire to connect the green wire on the bolt to the center pin inside of the plug and connect the body of the bolt to one of the three tension fingers inside the plug. Does the ST-47 Permit? If you have a Scully Ground Ball, attach the plug to it and touch the green wire to exposed base of the Ground Ball.

Does the ST-47 Permit?

YES	*NO*
Trailer grounding system is a fault. Have tank owner check the installation or, contact the Scull Service Department for assistance.	See TIP on Ground Ball Plug maintenance. If the plug checks OK, go to procedure 2, Step A1.

Procedure 2, Step A1

(Ground Bolt or Ground Ball NOT required) If you do not have a Scully Ground Bolt or Ground Ball. Using a Multi-Meter set on DC volts measure the voltage between spring plunger contact inside the plug (+) and one of the three contact fingers (-) of the Ground Ball Connector Plug.

Is the voltage between 11 and 14 volts DC?

YES	***NO***
Trailer grounding system could be at fault. Have tank owner check the installation or, contact the Scully Service Department for assistance.	If the voltage is lower or zero- Using an open end socket wrench, open the plug and cable junction box. Remove line power to the ST-47. Remove wires that come from the cable and are connected to terminals 9 and 10. Power the ST-47. Check the voltage at terminals 9 (+) and 10 (-) at the terminal block found inside. Power the ST-47. If you now read 11 and 14 VDC at terminals 9 and 10. There is a problem in the cable or wiring to the overfill plug. Correct the problem. If the voltage is still below limits, go to step B1.

Procedure 2, Step B

(Ground Bolt required) Using the correct socket or hex wrench (depends on ST-47 date of manufacture) remove the cover fasteners and open the front cover. Using a flat-blade screwdriver, remove the wires on intrinsically-safe terminals TB2 and 3. Attach the green wire of the Ground Bolt to TB2-3 and the top of the bolt (at the end of the threads) to TB2-2.

Does the ST-47 Permit?

YES	***NO***
There is a problem between the ST-47 TB-2 terminals and the Junction Box terminals. Correct the wiring problem.	The ST-47 circuit module is defective. Replace the module with a new one or, return the board to the Scully Signal Company for repair or Warranty consideration.

Procedure 2, Step B1

Using the correct socket or hex wrench (depends on ST-47 date of manufacture) remove the cover fasteners and open the front cover. Using a flat-blade screwdriver, remove the wires on intrinsically-safe terminals TB2 and 3. Using a Multi-Meter set on DC volts, measure the DC voltage between terminals TB2-3 (+) and TB2 (-).

Is the voltage between 11 and 14 volts DC?

YES	***NO***
There is a problem between the ST-47 TB-2 terminals and the Junction Box terminals. Correct the wiring problem.	The ST-47 circuit module is defective. Replace the module with a new one or, return the board to the Scully Signal Company for repair or Warranty consideration.

5.6 Troubleshooting Models with Deadman Capability

5.6.1 General

Before proceeding with this section the ST-47 must be operational. It must permit (green lamp) when connected to a Scully Ground Ball or Ground Bolt. The unit is capable of turning on the green permit lamp even if the deadman circuitry is not functioning properly. If the unit will not permit, consult the earlier parts of this troubleshooting section for advice on repairing the problem.

5.6.2 Wire-Through and Stand-Alone Applications Troubleshooting

Problem: The ST-47 permit lamp comes on but the ST-47 will not activate an external device when the deadman handle is operated. Turn off the power to the ST-47 by turning the Bypass switch to the OFF position (if the unit has this option) or turn power off at the source. Using the correct socket or hex wrench (depends on ST-47 date of manufacture) remove the cover fasteners and open the front cover. Remove the fuse from its holder which is located at the right end of TB-1 by turning the top on the right. Remove the now exposed glass fuse from the holder and check it with a multi-meter set to the Ohms position. Do not rely on a visual inspection as a test for the fuse.

Is the fuse blown?

YES	NO
The external device or wiring to it may be shorted. Replace fuse, power-up system and retest. If fuse continues to blow then check for shorts in the output control wire to device. Repair the problem, replace the fuse with one that is the same rating and retest.	Replace the fuse in the holder and turn on the power to the ST-47. With the cover of the ST-47 open, locate TB3 which is the two terminal strip at the bottom of the explosion proof housing. Using a jumper wire, short the two terminals together. If the external device now operates. There is a problem with the deadman switch or the wiring to it. Repair the problem. If the ST-47 still does not permit, there could be a problem with the I.S. Barrier relay that is located on the inside front cover of unit. Consult the Scully Service Department.

6.1 DWG 61655 – Installation Drawing with Entity Parameters

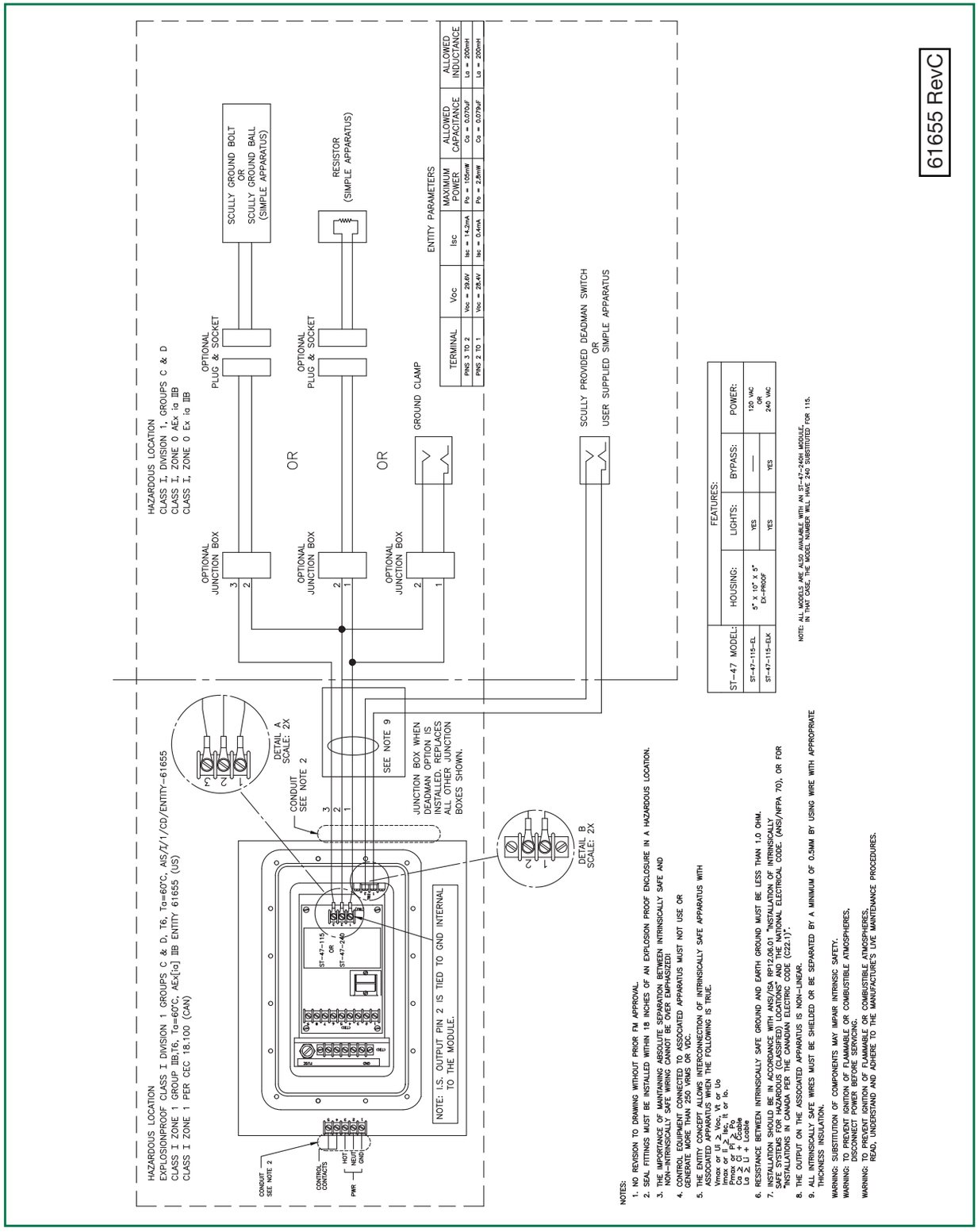

6.2 DWG 31412 – Outline Drawing – Control Unit Enclosure

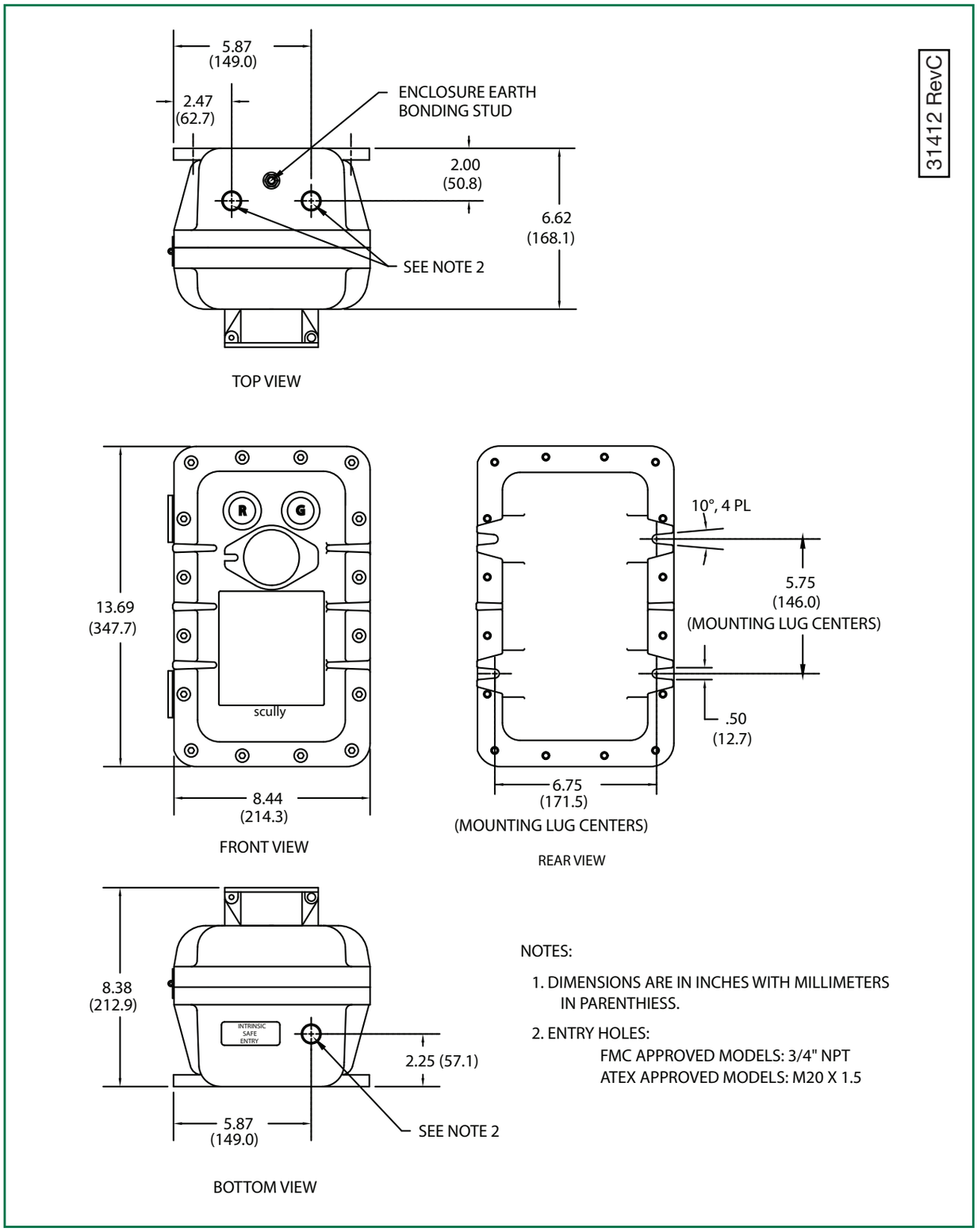

6.3 DWG 63039 – Outline Drawing – Sculcon Junction Box

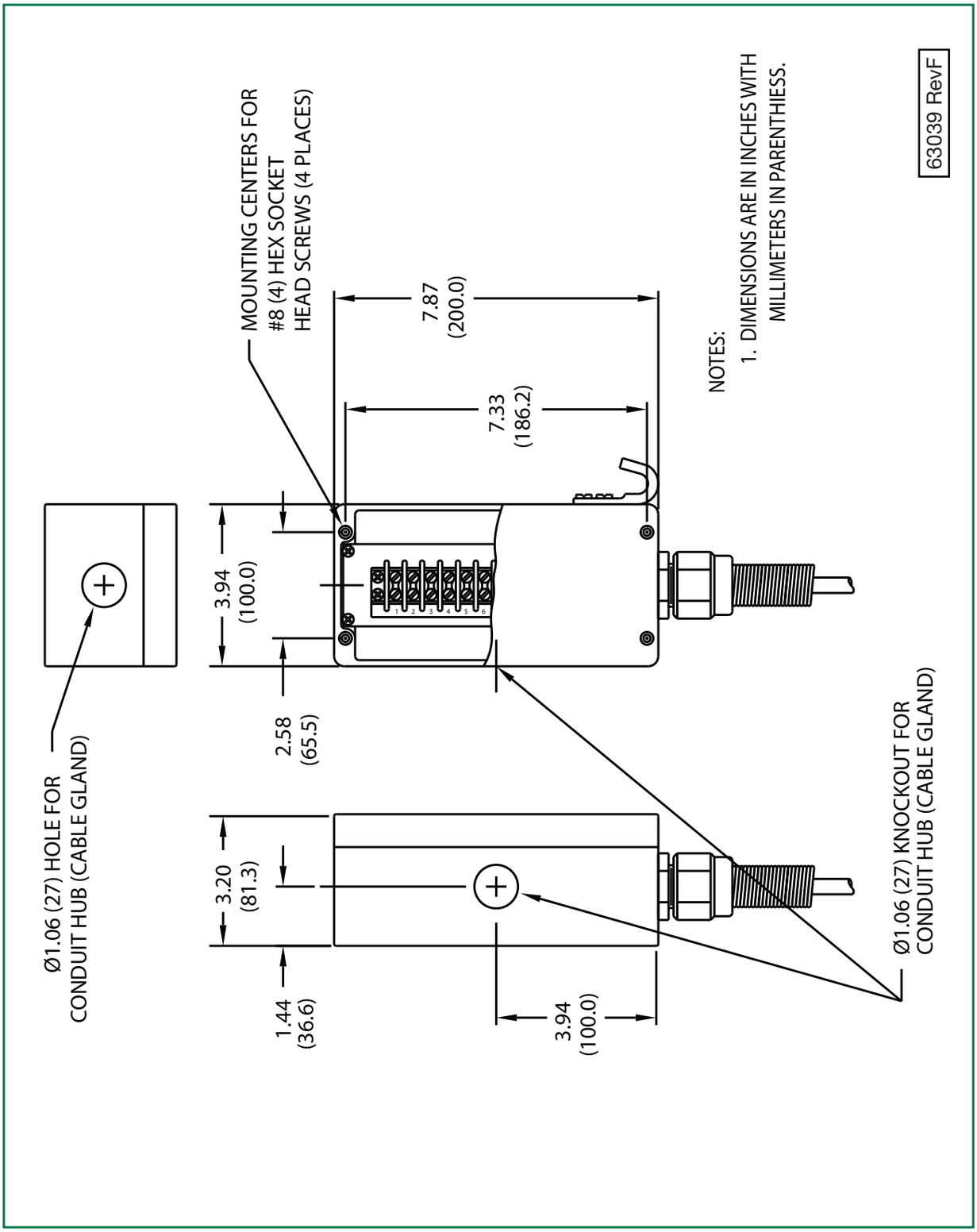

6.4 DWG 61441 – Wiring Diagram – Typical Loading Rack Control

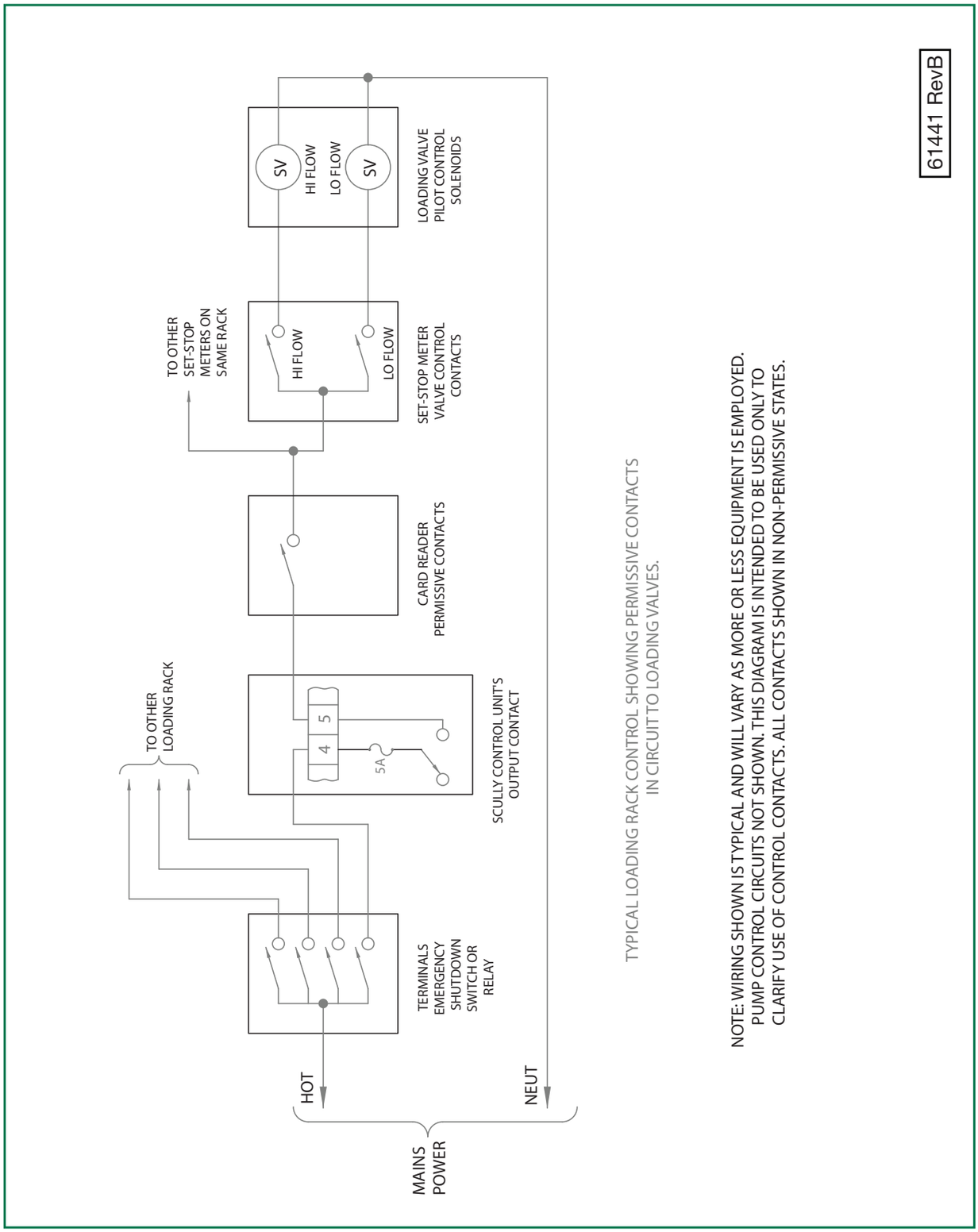

6.5 DWG 61345 – Principle of Overfill Prevention & Grounding

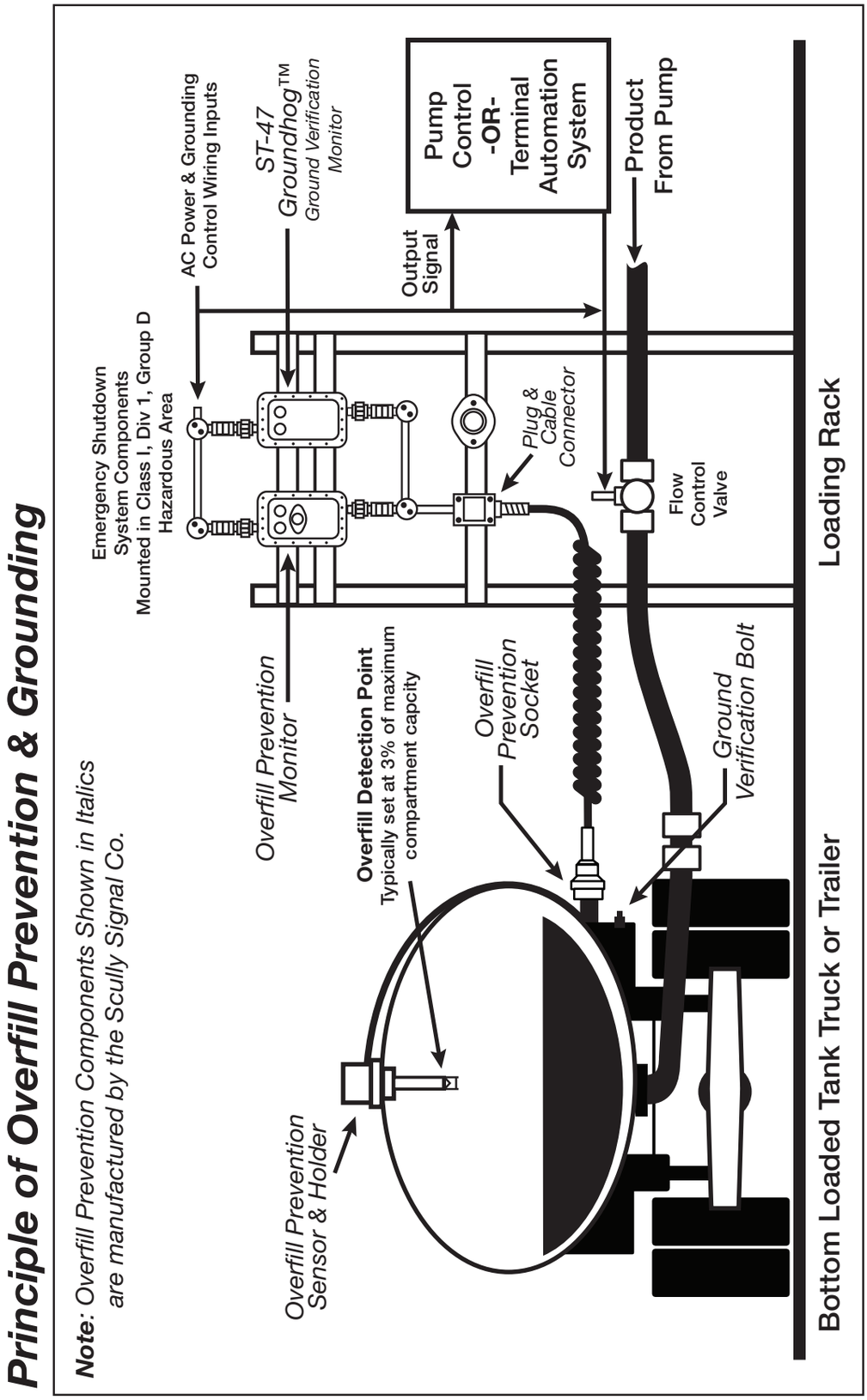

6.6 DWG 61346 – Grounding Protection for Product Loading & Offloading

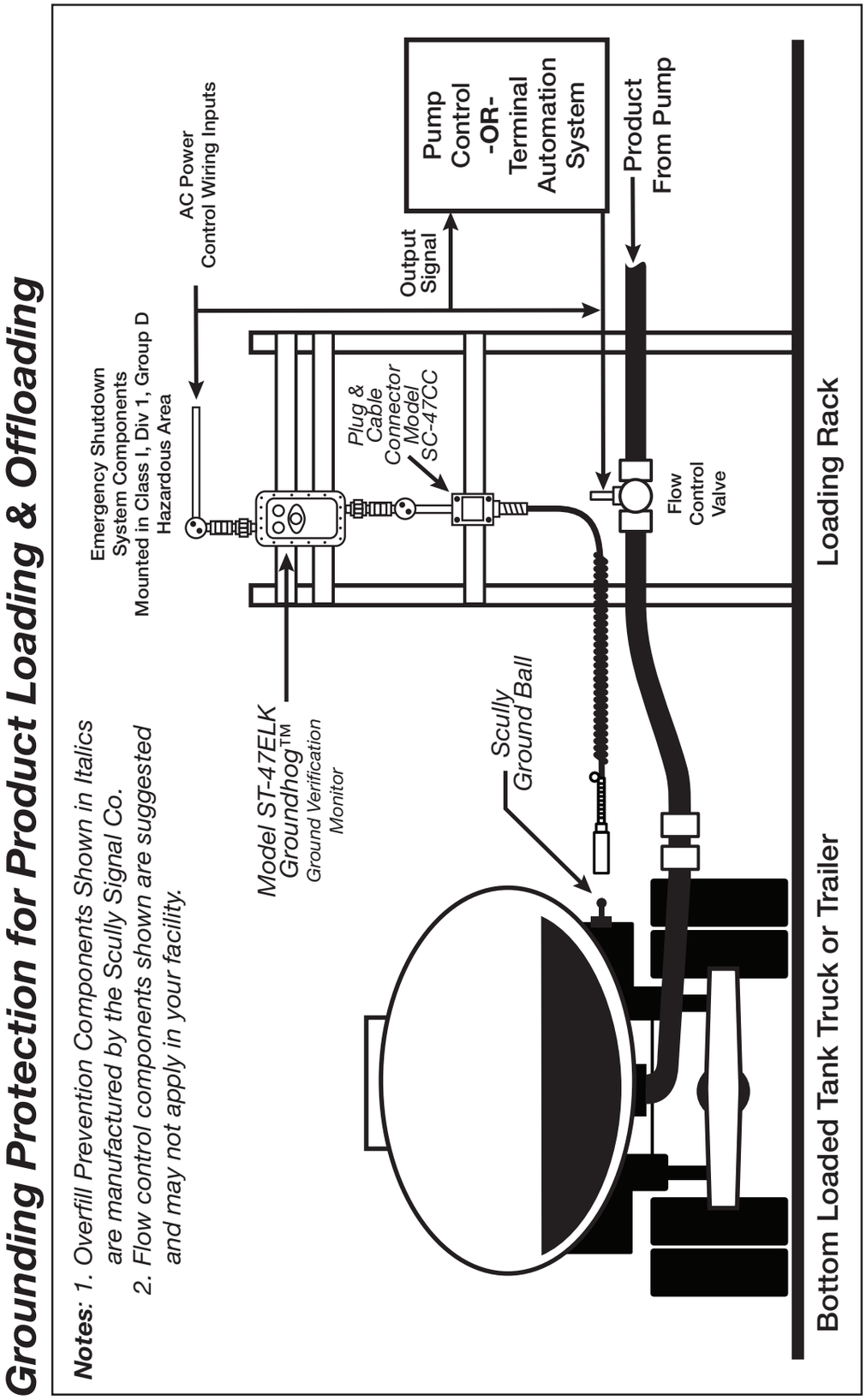

6.7 DWG 61442 – Mounting Diagram – Control Unit & Junction Box

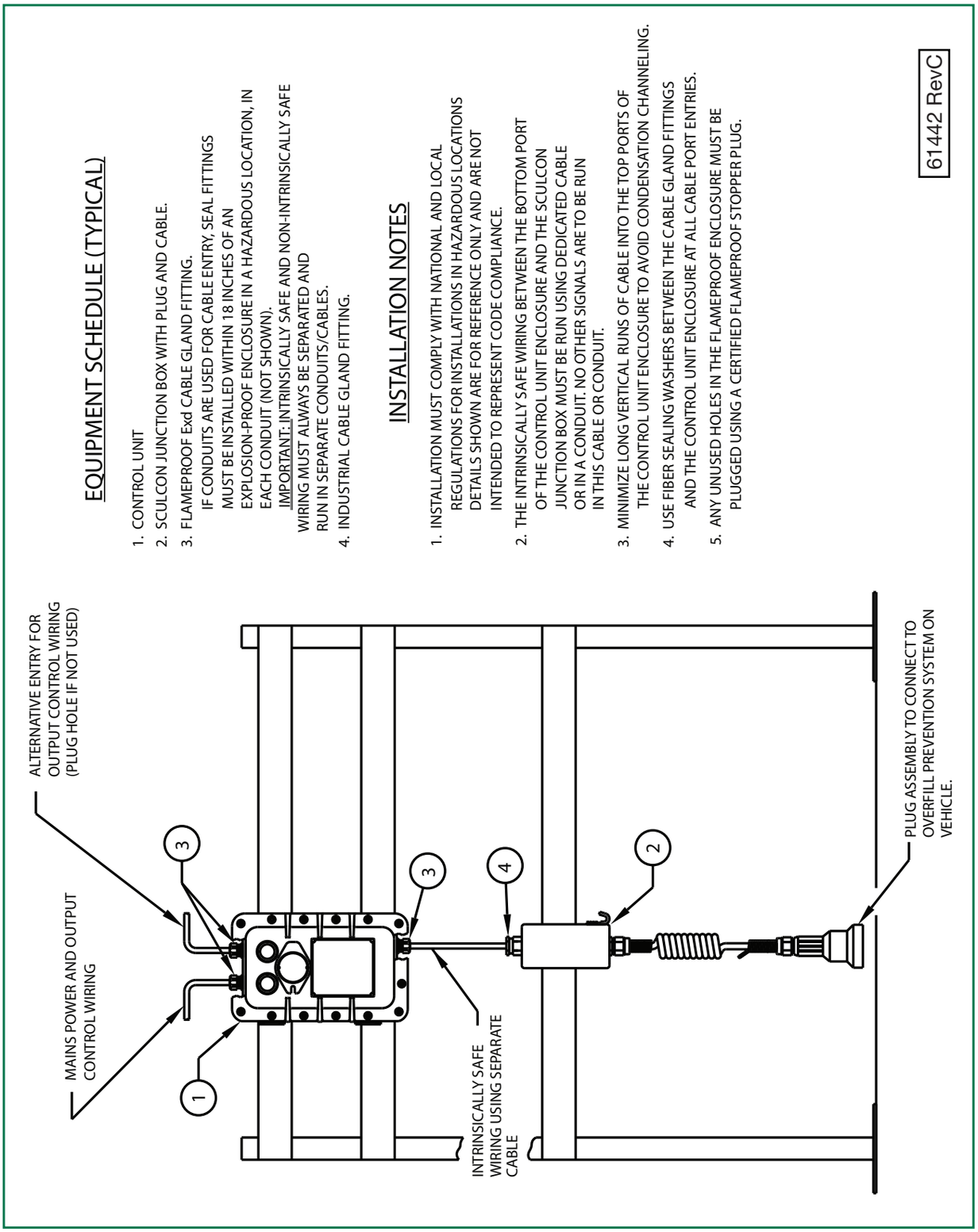

6.8 DWG 61334 – Internal Wiring Diagram ST-47-EL

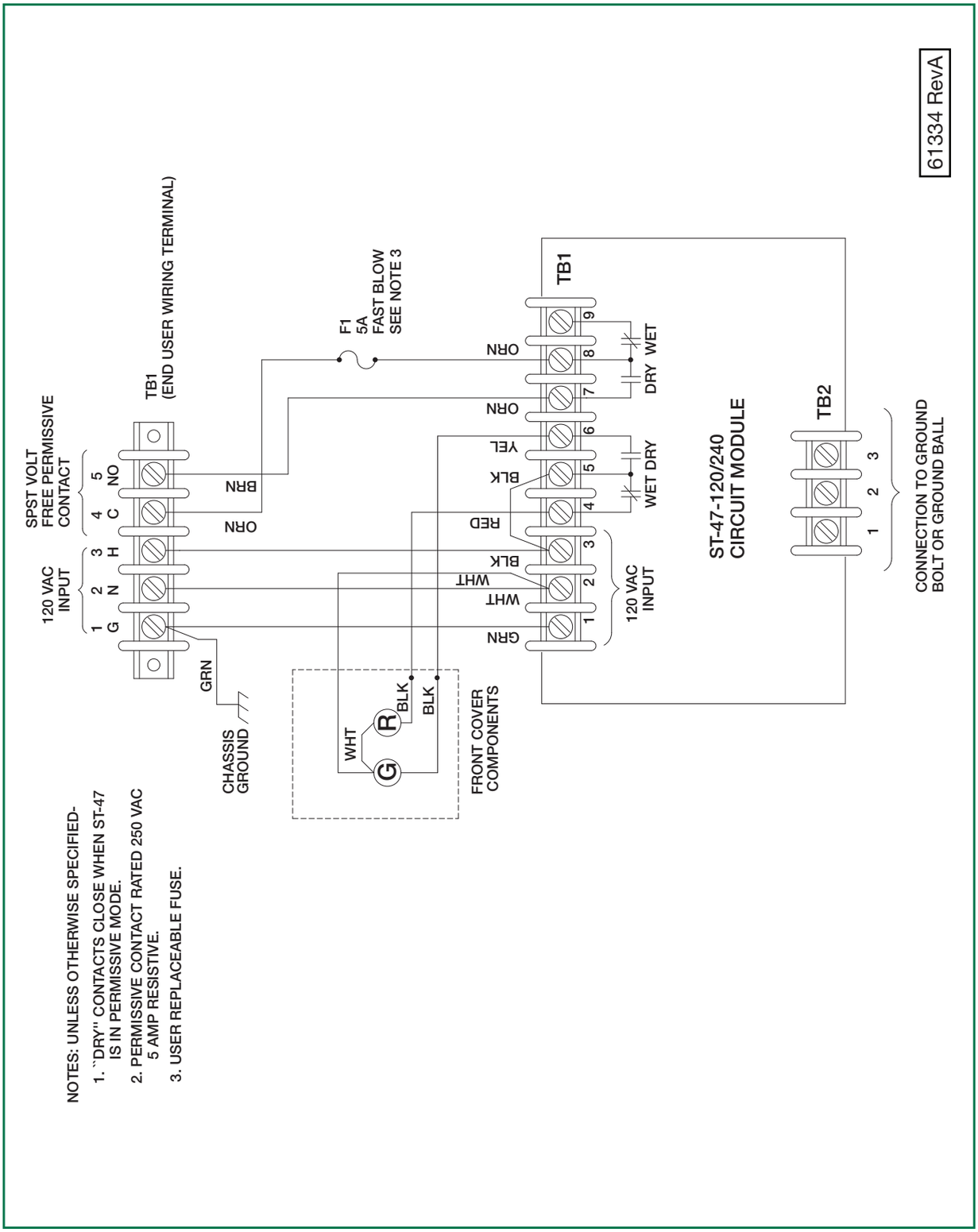

6.9 DWG 61333 – Internal Wiring Diagram ST-47-ELK

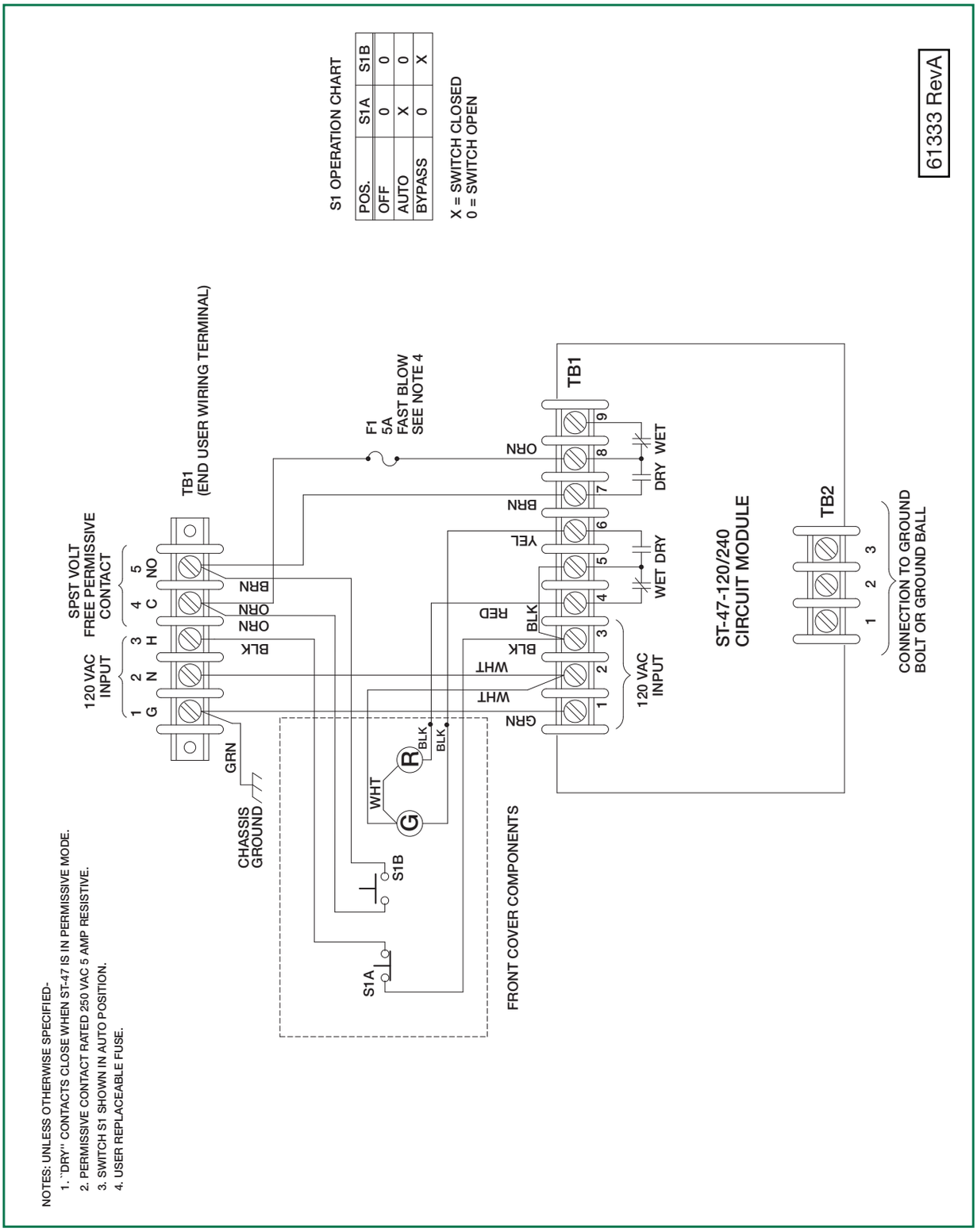

6.10 DWG 61331 – Internal Wiring Diagram ST-47-EL/D

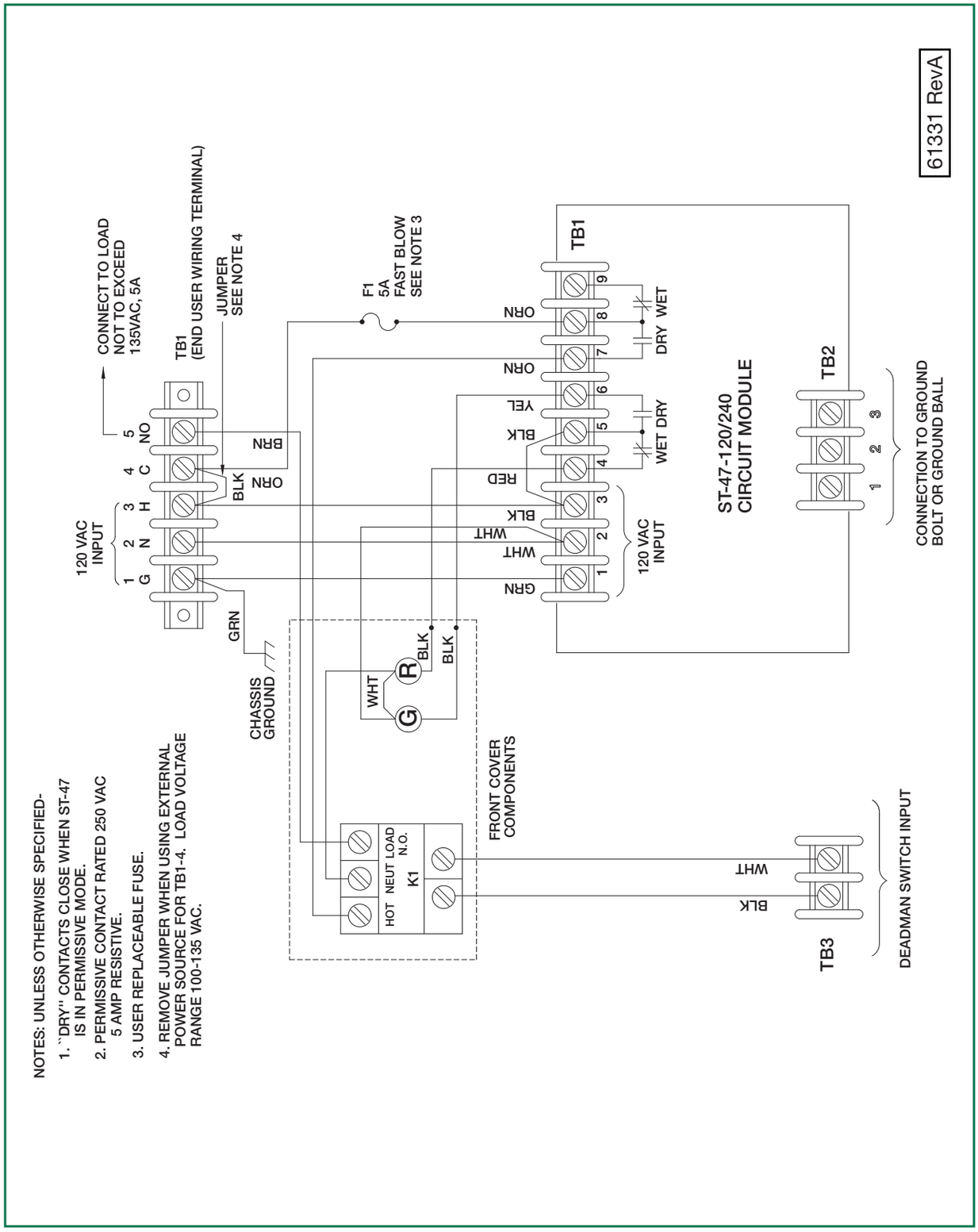

6.11 DWG 61332 – Internal Wiring Diagram ST-47-ELK/D

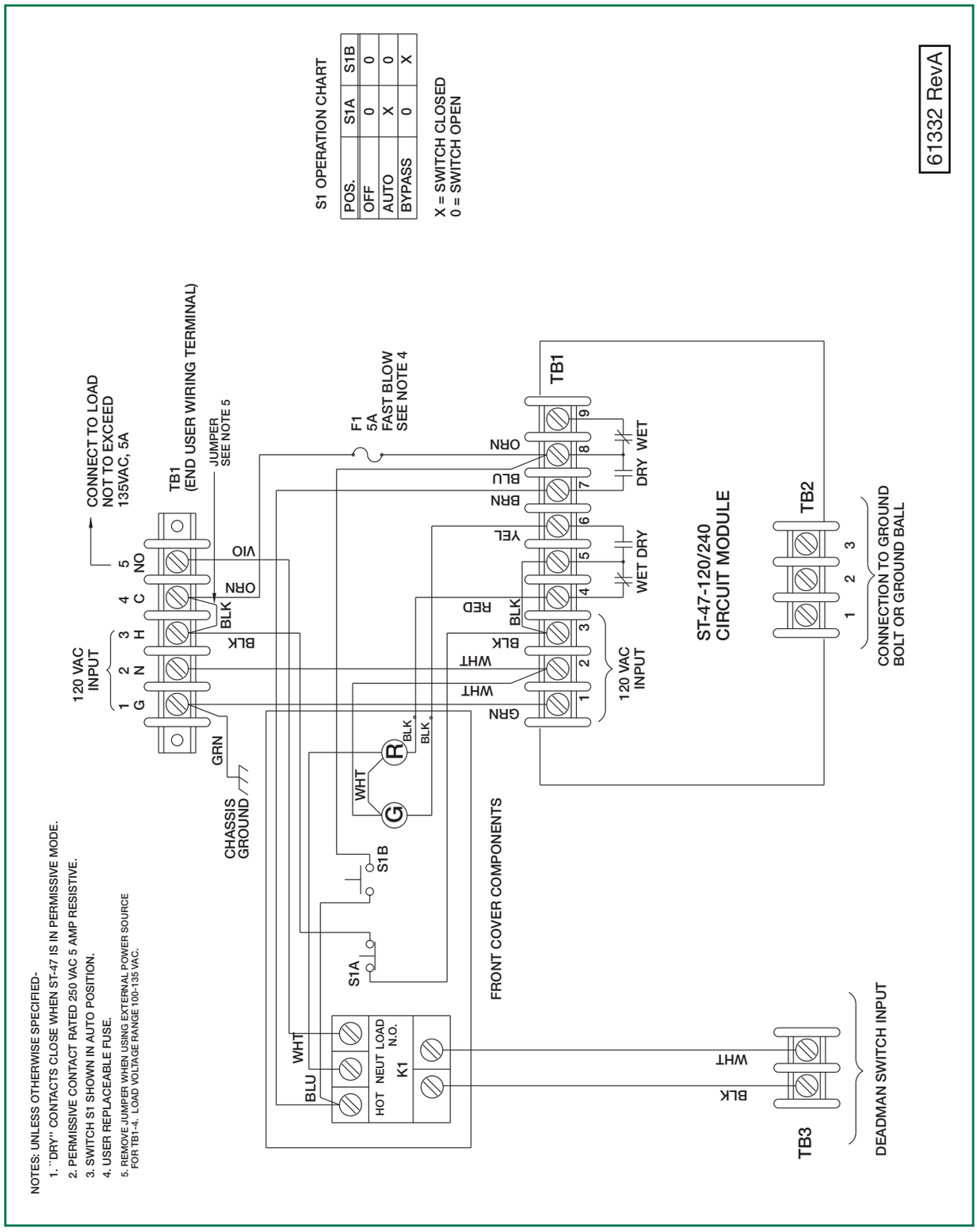

6.12 DWG 61121 – Field Wiring Diagram ST-47-115/240 EL(K)

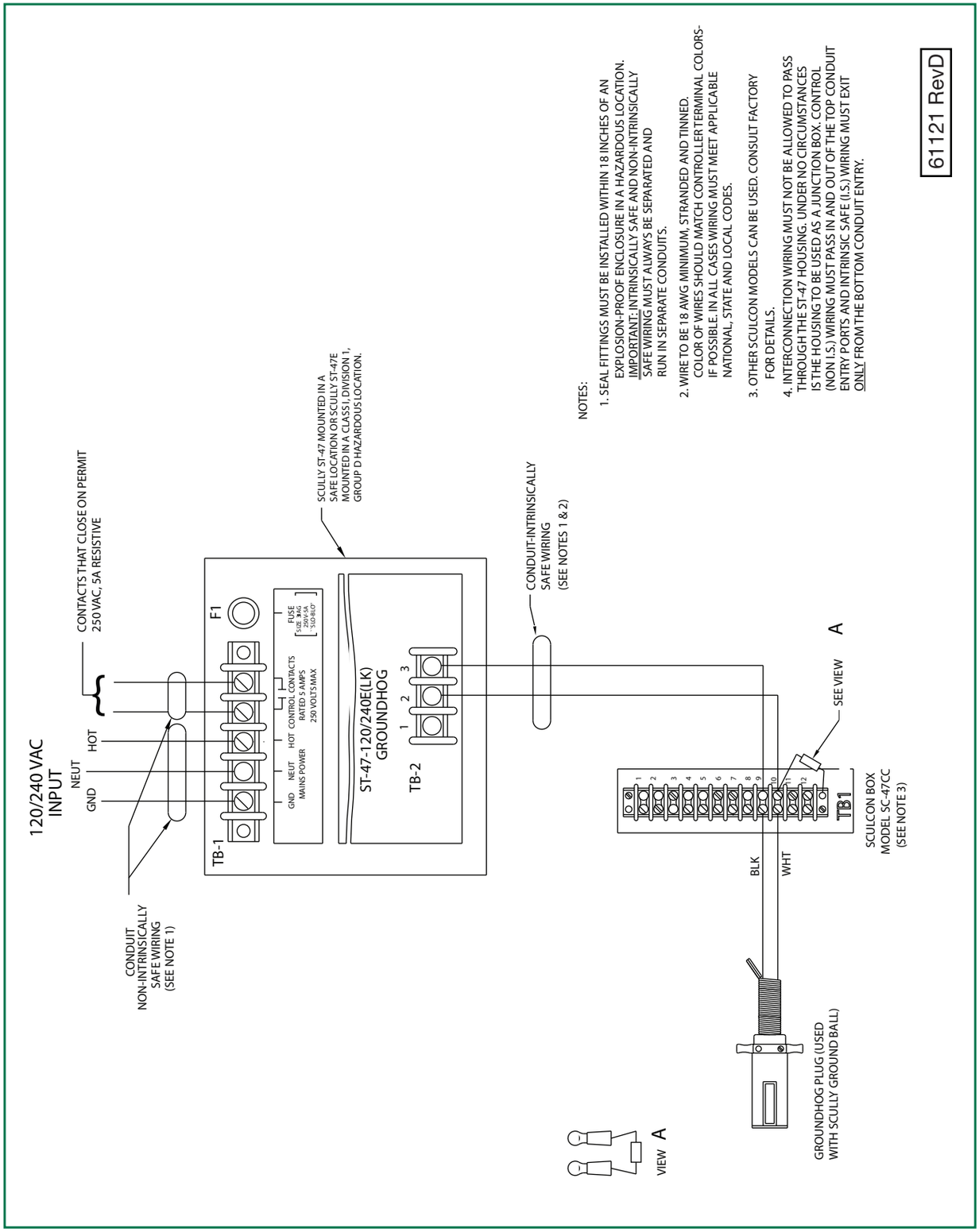

6.13 DWG 61099 – Field Wiring Diagram ST-35/ST-47

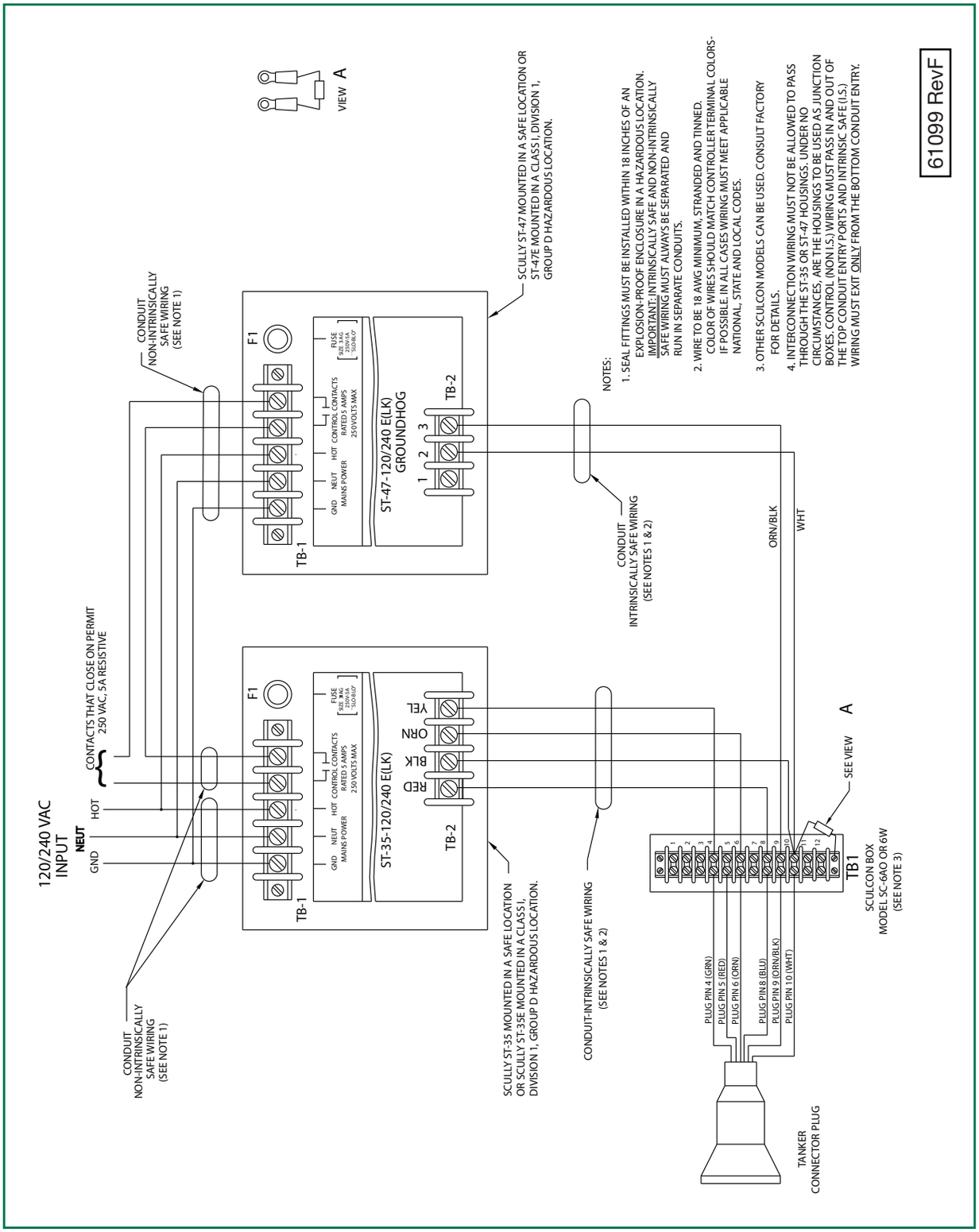

6.14 DWG 61098 – Field Wiring Diagram ST-15/ST-47

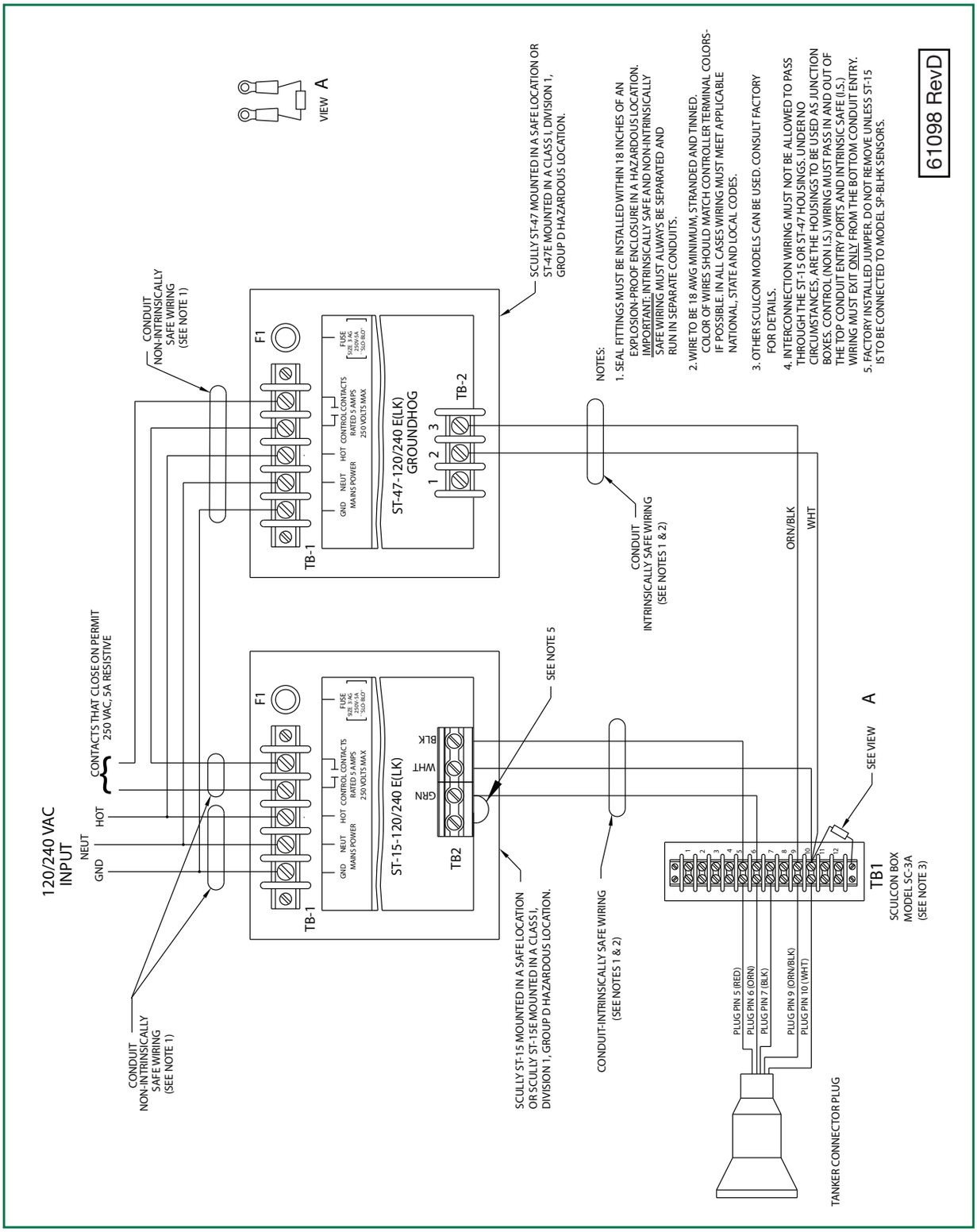

6.15 DWG 61141 – Field Wiring Diagram ST-47-115 EL(K)/D

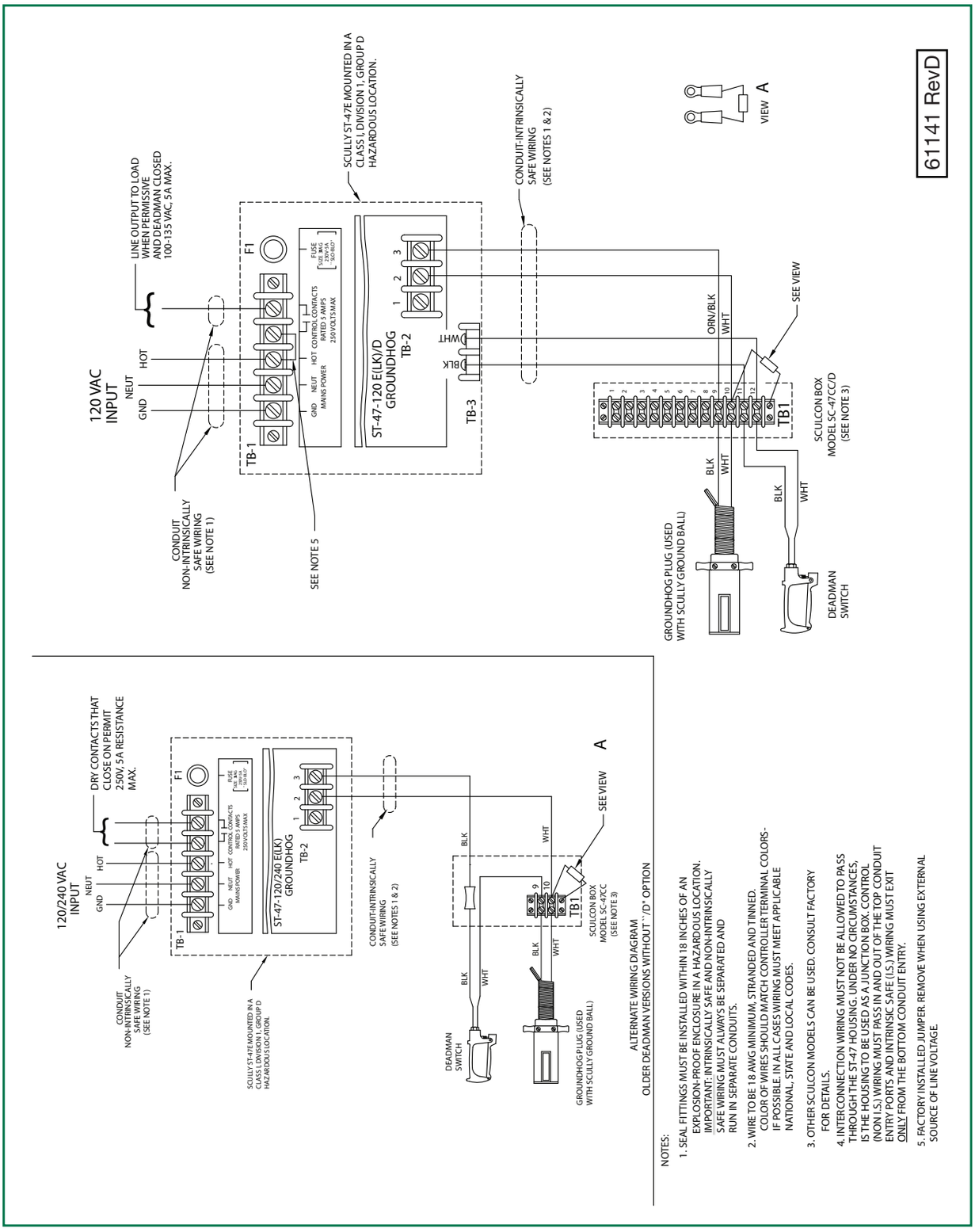

6.16 DWG 61168 – Field Wiring Diagram ST-15-ELK & ST-47-ELK/D

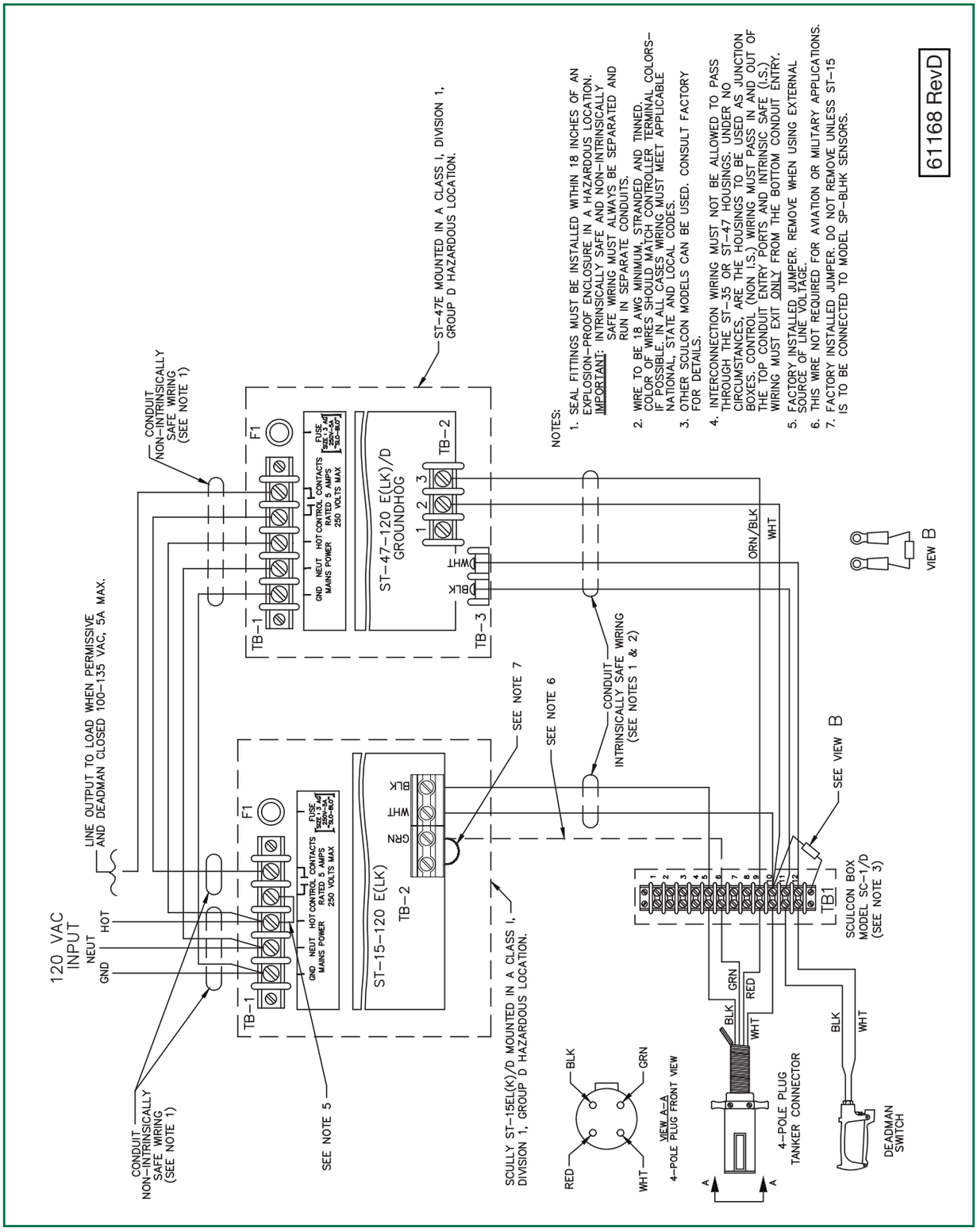

6.17 DWG 61167 – Field Wiring Diagram ST-15-ELK & ST-47-ELK/D

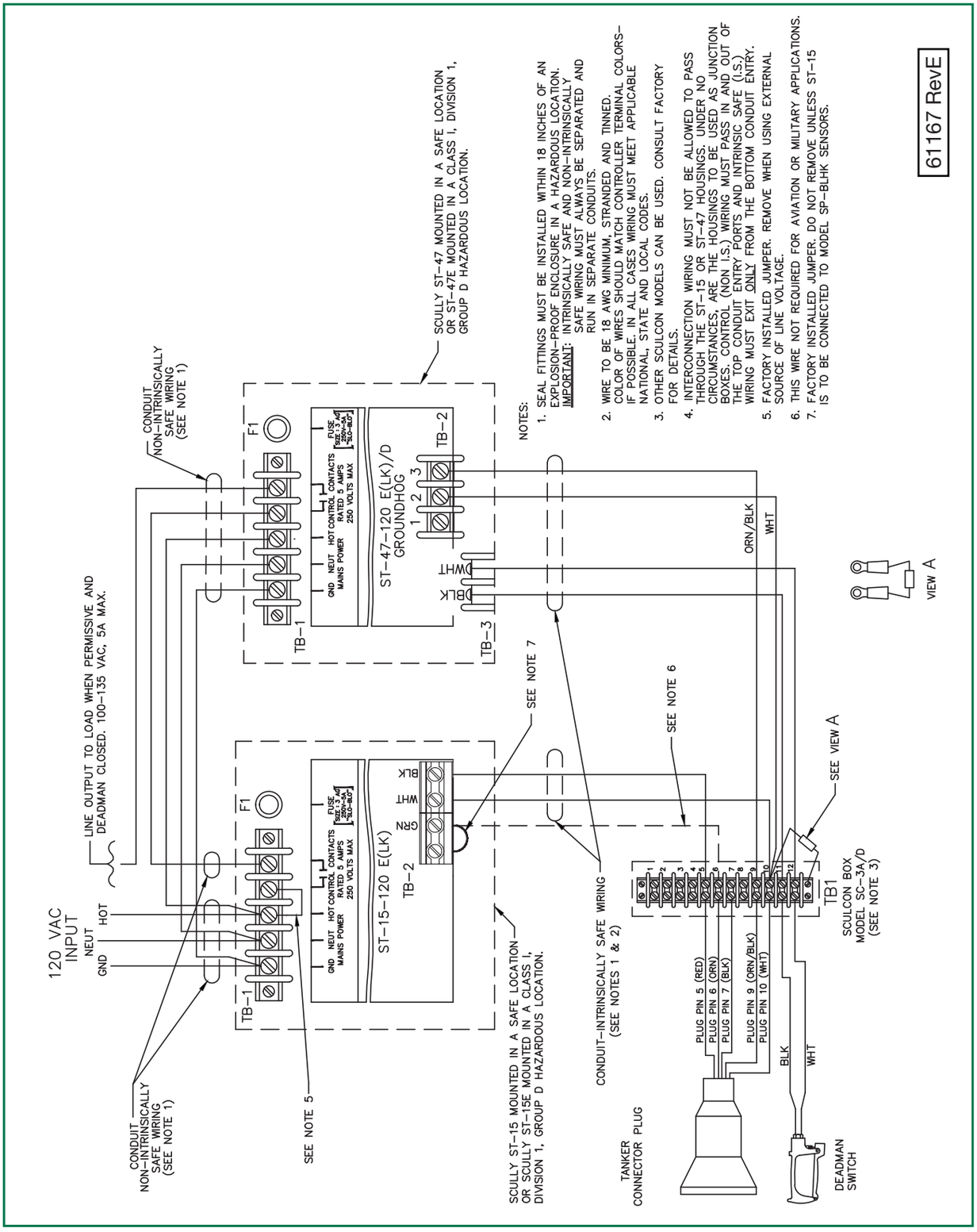

6.18 DWG 61169 – Field Wiring Diagram ST-35-ELK & ST-47-ELK/D

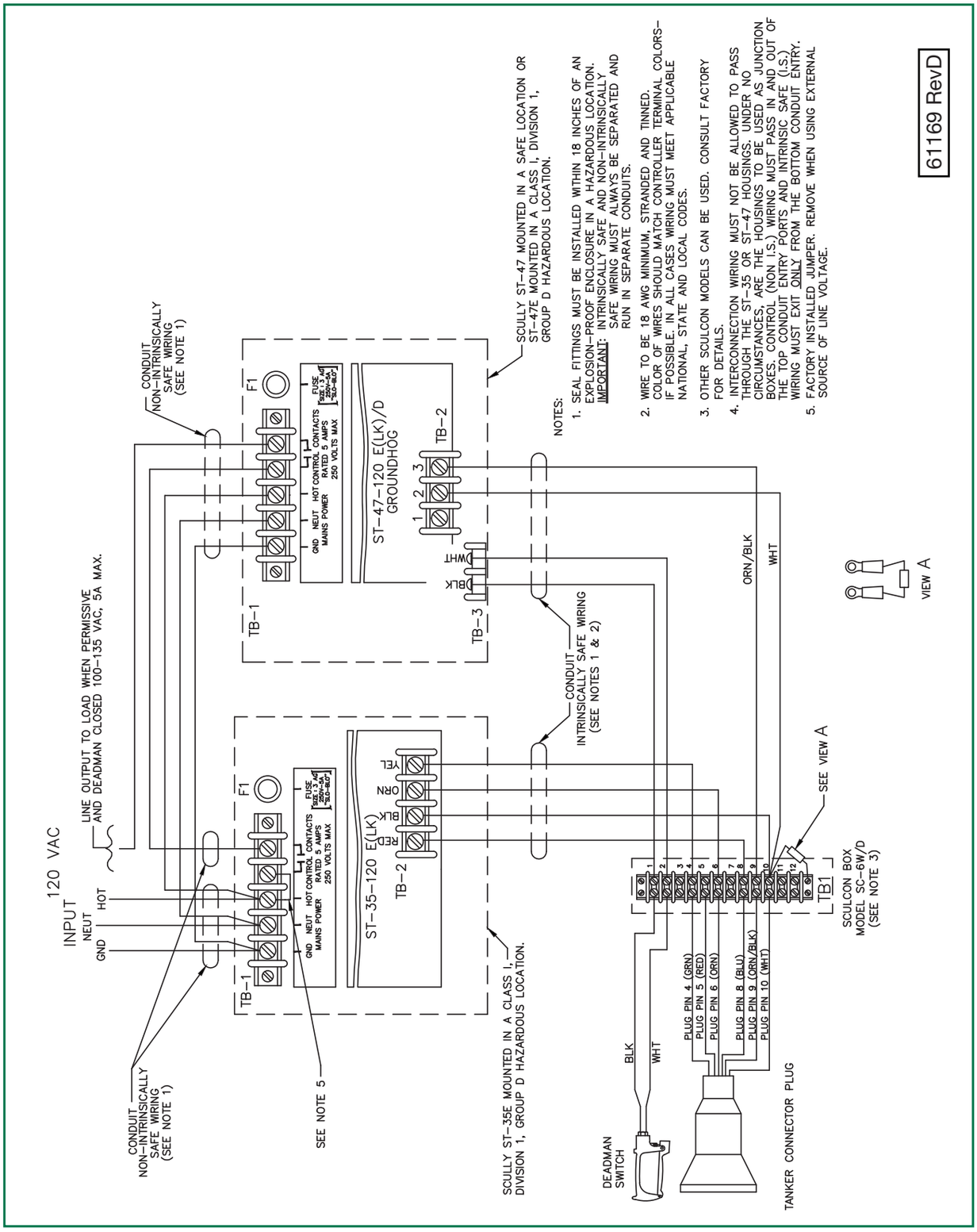

6.19 DWG 61202 – Replacement Parts for ST-47-115

REPLACEMENT PARTS for ST-47 115VAC

Groundhog™ Controller
FM Models

Part No. Model

08508 ST-47-115 EL

08220 ST-47-115 ELK

Note: Controller Models Suffix:
Explosion-proof housing (E), Indicator Lights (L), Key (K) Lockable Bypass Switch.

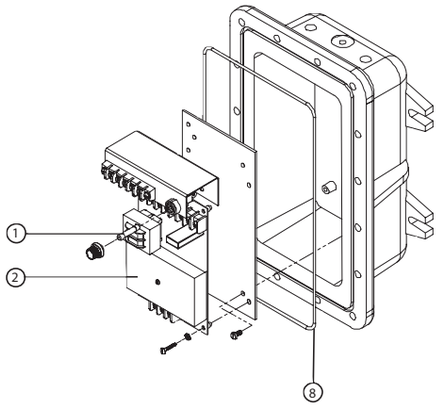

Replacement Parts

Item	Part No.	Description	Qty.
1	26311	Control Fuse, 5 Ampere	1
2	09511	ST-47C-115 Replacement Module	1
3	50041	Screw, Hex Head	16
4	09124	Replacement Lens and Guard Assembly, Red	1
5	09125	Replacement Lens and Guard Assembly, Green	1
6	08350	Bypass Switch Lock Box (includes 2 mounting screws).1	
7	21733	Corrosion Capsule	1
8	31340	O-ring cover seal	1
9*	27005	Bulb, 135V, 6W	2
10	09384	LED Bulb, Red	1
11	09385	LED Bulb, Green	1
12	08343	Pilot Light Replacement LED Kit, Red (includes 4,10,12)	1
13	08342	Pilot Light Replacement LED Kit, Green (includes 5, 11,13)	1
14	26022	Bypass Switch Contact Block	1
15	26055	Bypass Switch Operator 3-Position	1

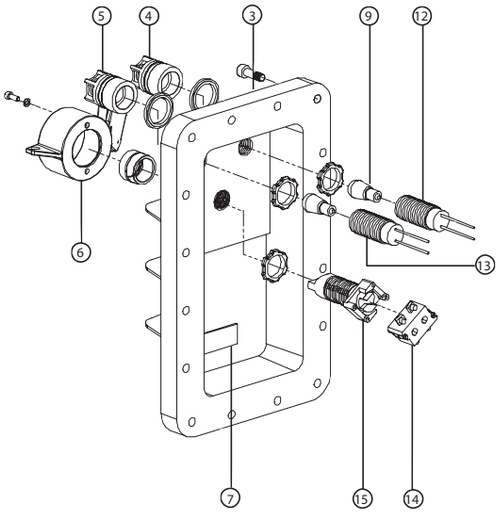

Notes:
Item 3: Hex-head screw used on models built after 10/92.
Item 8: O-ring used on models built after 10/92.
*Replacement Bulb for incandescent style explosion-proof lights only.

61202, Rev E 2013

scully
MaxSafety® SYSTEMS

Scully Signal Company
70 Industrial Way,
Wilmington, MA 01887-3479, USA
Tel: 800 272 8559 / 617 692 8600
email: sales@scully.com

Scully Systems Europe NV
Eksterveldlaan 31a
2820 Bonheiden / Belgium
Tel: +32 (0) 15 56 00 70
email: info@scully.be

Scully UK Ltd
Meridian House, Unit 33,
37 Road One Winsford Industrial Estate,
Winsford Cheshire CW7 3QG / UK
Tel.: +44 (0) 1606 553805
email: sales@scullyuk.com

Dynamic Self-Testing® Overfill Prevention Systems

6.20 DWG 61273 – Replacement Parts for ST-47-240

REPLACEMENT PARTS for ST-47 240VAC

Groundhog™ Controller
FM Models

Part No. Model

08675 ST-47-240 EL

08502 ST-47-240 ELK

Note: Controller Models Suffix:
Explosion-proof housing (E), Indicator Lights (L), Key (K) Lockable Bypass Switch.

Replacement Parts

Item	Part No.	Description	Qty.
1	26311	Control Fuse, 5 Amperes	1
2	09512	ST-47-240 Replacement Module	1
3	50041	Screw, Hex Head	16
4	09122	Replacement Lens and Guard Assembly, Red	1
5	09123	Replacement Lens and Guard Assembly, Green	1
6	08350	Bypass Switch Lock Box (includes 2 mounting screws)	1
7	21733	Corrosion Capsule	1
8	31340	O-ring cover seal	1
9	27006	Bulb, 240V, 10W	2
10	08346	Pilot Light Replacement Kit, Red (includes 4, 9 & 10)	1
11	08345	Pilot Light Replacement Kit, Green (includes 5, 9 & 11)	1
12	26022	Bypass Switch Contact Block	1
13	26055	Bypass Switch Operator, 3-Position	1

Notes:
Item 3: Hex-head screw used on models built after 10/92.
Item 8: O-ring used on models built after 10/92.

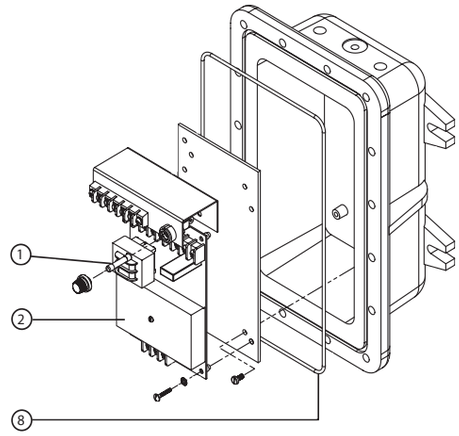

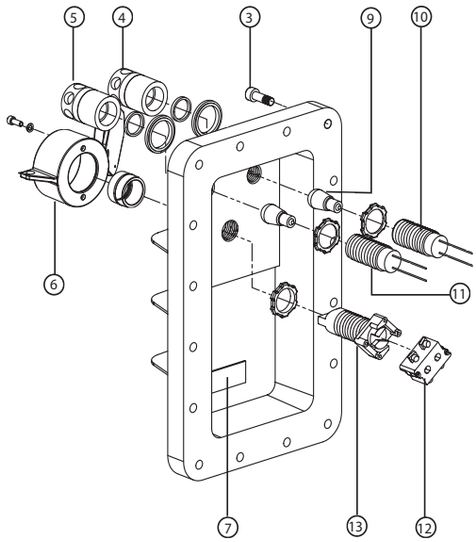

scully
MaxSafety® SYSTEMS

Scully Signal Company
70 Industrial Way,
Wilmington, MA 01887-3479, USA
Tel: 800 272 8559 / 617 692 8600
email: sales@scully.com

Scully Systems Europe NV
Eksterveldlaan 31a
2820 Bonheiden / Belgium
Tel: +32 (0) 15 56 00 70
email: info@scully.be

Scully UK Ltd
Meridian House, Unit 33,
37 Road One Winsford Industrial Estate,
Winsford Cheshire CW7 3QG / UK
Tel.: +44 (0) 1606 553805
email: sales@scullyuk.com

Dynamic Self-Testing® Overfill Prevention Systems

Notes:

Notes:

Scully - Setting Standards in Safety and Dependability since 1936.

For over seventy-five years Scully has been engineering and building products to the highest safety and reliability standards. We design and manufacture all of our systems under one roof to ensure complete quality control over our manufacturing and testing operations. Scully is ISO certified and all of our products are 100% made in the U.S.A. In addition, we back up our products with the best service in the industry. We have direct sales and service personnel in the U.S.A., The United Kingdom, and Europe and are represented in over 50 countries.

For more information and 24 hour technical assistance, call Scully Signal Company at 1-800-2SCULLY (1-800-272-8559).

Scully Headquarters in Wilmington, MA U.S.A.

Copyright © 2018 Scully Signal Company. MaxSafety, Sculcon and Scully are registered trademarks of Scully Signal Company. The names and logos of other companies mentioned herein may be trademarkes of their respective owners. This document is for informational purposes only. Scully makes no warranties, expressed or implied, in this document. All Rights Reserved. Specifications are subject to change without notice.

61053 Rev K
July 2020

Scully Signal Company
70 Industrial Way
Wilmington, MA 01887, USA
800 272 8559 • sales@scully.com

Scully Systems Europe NV
Maanstraat 25
2800 Mechelen, Belgium
+32 (0) 15 56 00 70 • info@scully.be

Scully UK Ltd
Meridian House, Unit 33
37 Road One Winsford Industrial Estate,
Winsford Cheshire CW7 3QG, UK
+44 (0) 1606 553805 • sales@scullyuk.com

Dynamic Self-Testing® Overfill Prevention Systems